INSTALLATION MANUAL

FOR ZONGSHEN® ENGINE TYPE C80 SERIES

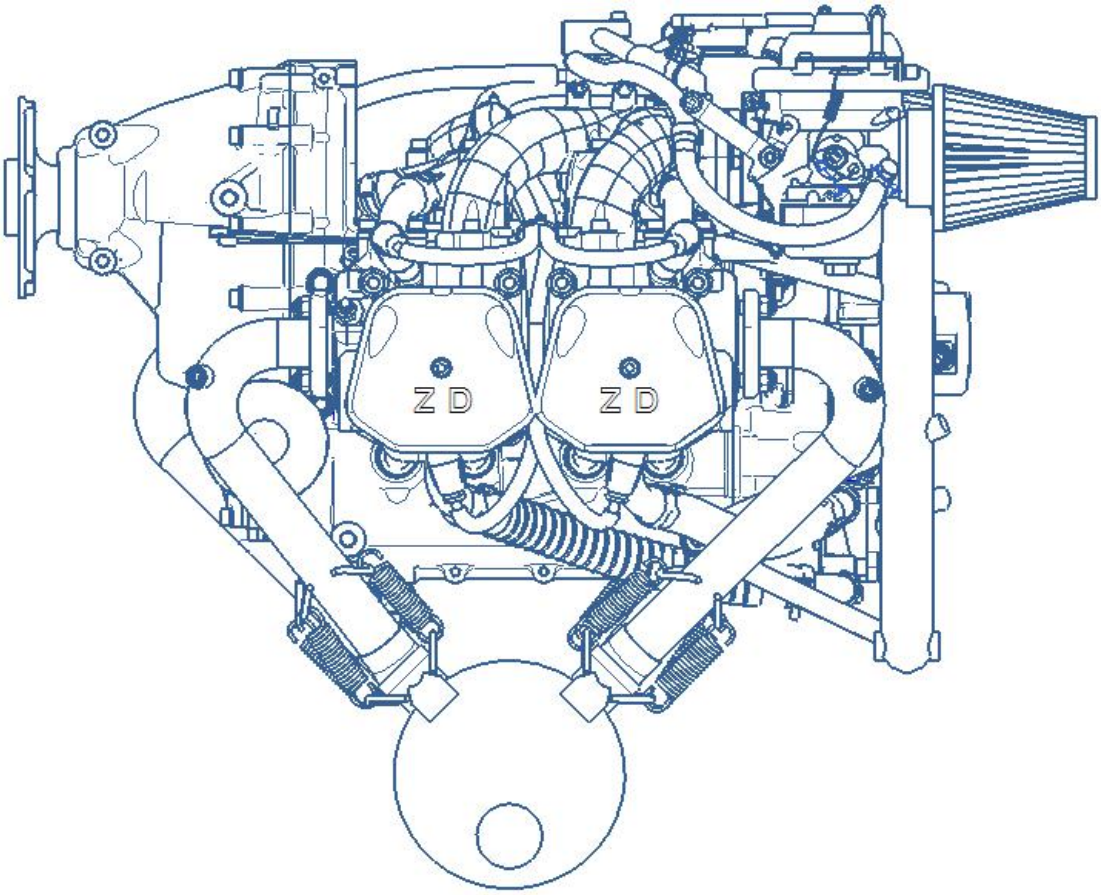

⚠ WARNING
Before starting with engine installation, please read the Installation Manual completely as it contains important safety relevant information.

Directory

1) Introduction

Thank you for purchasing aero engines produced by Zongshen Aero Engine.

Before starting with the engine installation, read this Installation Manual carefully. The Manual will provide you with basic information on correct engine installation, a requirement for safe engine operation.

If any passages of the Manual are not completely understood or in case of questions, please, contact an authorized Distribution or Service Center for Zongshen Aero Engines.

Zongshen Aero Engine wishes you much pleasure and satisfaction flying your aircraft powered by this Zongshen aero engine.

1.1) Others

This Installation Manual is to acquaint the owner/user of this aircraft engine with basic installation instructions and safety information.

For more detailed information on operation, maintenance, safety or flight, consult the documentation provided by the aircraft manufacturer and dealer.

For further information on maintenance and spare part service contact the nearest Zongshen Aero Engine distributor.

1.2) Remarks

The engine serial number is on the name board of magneto cover.

2) Safety

Although the mere reading of these instructions will not eliminate a hazard, the understanding and application of the information herein will promote the proper installation and use of the engine.

The information and components-/system descriptions contained in this Installation Manual are correct at the time of publication. Zongshen Aero Engine, however, maintains a policy of continuous improvement of its products without imposing upon itself any obligation to install them on its products previously manufactured.

Zongshen Aero Engine reserves the right at any time to discontinue or change specifications, designs, features, models or equipment without incurring obligation.

The illustrations in this Installation Manual show the typical construction. They may not represent in full detail or the exact shape of the parts which have the same or similar function.

Specifications are given in the SI metric system with the USA equivalent in parenthesis. Where precise accuracy is not required, some conversions are rounded off for easier use.

2.1) Repeating symbols

This Manual uses the following symbols to emphasize particular information. These indications are important and must be respected.

WARNING: Identifies an instruction which, if not followed, may cause serious injury including the possibility of death.

CAUTION: Denotes an instruction which, if not followed, may severely damage the engine or other component.

NOTE: Indicates supplementary information which may be needed to fully complete or understand an instruction.

2.2) Safety information

WARNING: Only certified technicians (authorized by the local airworthiness authorities) and trained on this product are qualified to work on these engines.

WARNING: Never fly the aircraft equipped with this engine at locations, airspeeds, altitudes, of other circumstances from which a successful no-power landing cannot be made, after sudden engine stoppage.

Unless correctly equipped to provide enough electrical power for night VFR (according latest requirement as ASTM), this engine is restricted to DAY VFR only.

-With the conditions of VFR, non-power slide and landing procedure is designed.

-This engine is not suitable for acrobatics (inverted flight, etc.).

-This engine shall not be used on rotorcrafts with an in-flight driven rotor (e.g.helicopters).

-It should be clearly understood that the choice, selection and use of this particular engine on any aircraft is at the sole discretion and responsibility of the aircraft manufacturer, assembler and owner/user.

-Due to the varying designs, equipment and types of aircraft, Zongshen Aero Engine makes no warranty or representation on the suitability of its engine's use on any particular aircraft. Further, Zongshen Aero Engine makes no warranty or representation of this engine's suitability with any other part, component or system which may be selected by the aircraft manufacturer, assembler or user for aircraft application.

-Whether you are a qualified pilot or a novice, complete knowledge of the aircraft, its

controls and operation is mandatory before venturing solo. Flying any type of aircraft involves a certain amount of risk. Be informed and prepared for any situation or hazard associated with flying.

-A recognized training program and continued education for piloting an aircraft is absolutely necessary for all aircraft pilots. Make sure you also obtain as much information as possible about your aircraft, its maintenance and operation from your dealer.

-You should be aware that any engine may seize or stall at any time. This could lead to a crash landing and possible severe injury or death. For this reason, we recommend strict compliance with the maintenance and operation and any additional information which may be given to you by your distributor.

-Before flight, ensure that all engine controls are operative. Make sure all controls can be easily reached in case of an emergency.

-Unless in a run up area, never run the engine with the propeller turning while on the ground. Do not operate engine if bystanders are close.

-To prevent unauthorized use, never leave the aircraft unattended with the engine running.

-Keep an engine log book and respect engine and aircraft maintenance schedules. Keep the engine in top operating condition at all times. Do not operate any aircraft which is not properly maintained or has engine operating irregularities which have not been corrected.

-Since special tools and equipment may be required, engine servicing should only be performed by an authorized Zongshen Aero Engine distributor or a qualified trained mechanic approved by the local airworthiness authority.

-To eliminate possible injury or damage, ensure that any loose equipment or tools are properly secured before starting the engine.

-When in storage protect the engine and fuel system from contamination and exposure.

-Certain areas, altitudes and conditions present greater risk than others. The engine may require humidity or dust/sand preventative equipment, or additional maintenance may be required.

-Never operate the engine and gearbox without sufficient quantities of lubricating oil.

-Check the amount of coolant regularly (by checking liquid level).

-Never exceed maximum rated r.p.m. and allow the engine to cool at idle for several minutes before turning off the engine.

-When the throttle valve is small and the engine runs at high speed (such as landing), the exhaust temperature increases and that causes the critical temperature over high, adjusting the position of throttle valve to match the engine rev.

-The engine should only be installed and placed into operation by persons familiar with the use of the engine and informed with regard to possible hazards.

-Never run the engine without a propeller as this will inevitably cause engine damage and present a hazard of explosion.

-Propeller and its attachment with a moment of inertia in excess of the specified value must not be used and releases engine manufacturer from any liability.

-Improper engine installation and use of unsuitable piping for fuel,- cooling,- and lubrication system releases engine manufacturer from any liability.

-Unauthorized modifications of engine or aircraft will automatically exclude any liability of the manufacturer for sequential damage.

2.3) Instruction

Engines require instructions regarding their application, use, operation, maintenance and repair.

-Technical documentation and directions are useful and necessary complementary elements for personal instruction, but can by no means substitute theoretical and practical instructions.

-These instructions should cover explanation of the technical context, advice for operation, maintenance, use and operational safety of the engine.

-This engine must only be operated with accessories supplied, recommended and released by Zongshen Aero Engine. Modifications are only allowed after consent by the engine manufacturer.

CAUTION: Spare parts must meet the requirements defined by the engine manufacturer. This is only warranted by use of Zongshen Aero Engine spare parts and/or accessories (see Illustrated Parts Catalog).

They are available only at the authorized Zongshen Aero Engine Distribution and Service Centers.

WARNING: Engine and gear box are delivered in "dry" conditions (without operating fluids). Before putting engine in operation it must be filled with oil. Use only oil as specified (consult Operators Manual or alternatively SI-914-019 "Selection of suitable operating fluids", last valid issue)).

CAUTION: Package and storage is required if the engine is out of use for a long time (longer than 2 months).

WARNING: Exclusively use tools and supplementary materials as listed in the Illustrated Parts Catalog. This Manual for engine installation is only part of the Technical Documentation and will be supplemented by the respective Operators Manual, Maintenance Manual and Spare Parts List. Pay attention to references to other documentation, found in various parts of this Manual.

2.4) Technical documentation

The information given in the

-Installation Manual

-Operators Manual

-Maintenance Manual

are based on data and experience that are considered applicable for professionals under normal conditions.

The rapid technical progress and variations of installation might render present laws and regulations inapplicable or inadequate.

3) List of the effective pages

Chapter	Page	Date		Chapter	Page	Date

4) Table of amendments

No.	Chapter	Page	Date of change	Remark for approval	Date of approval from authorities	Date of inclusion	Signature

5) Description of design

5.1) Designation of type

Basic type

C80 Aero Engine version Ⅰ: with overload.

C80 Aero Engine version Ⅱ: with torsional shock absorber.

NOTE: Propeller is driven by reduction gear of overload clutch.

5.2) Standard engine design

-4 stroke, 4 cyl. horizontally opposed, spark ignition engine, single central camshaft hydraulic tappets - push rods – OHV.

-liquid cooled cylinder heads

-ram air cooled cylinders

-dry sump, forced lubrication

-dual ignition of breakerless, capacitor discharge design

-2 constant depression carburetors

-Mechanical fuel pump

-engine suspension frame

-electric starter (12V，0.7kW)

-integrated AC generator with external rectifier regulator(14V，16A DC)

Optional parts

-oil cooler

-water cooler

-exhaust system

-oil tank

- oil tank with liquid lever sensor

-expansion tank

5.3) Engine components, engine views, definition of main axes

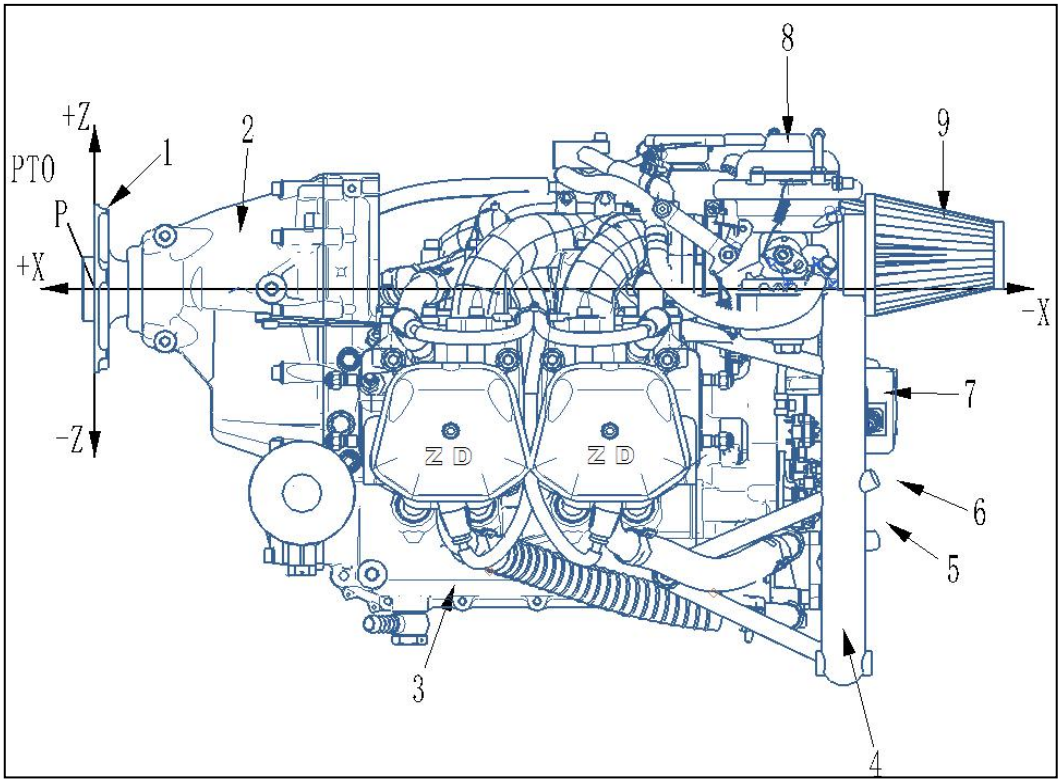

Fig. 1

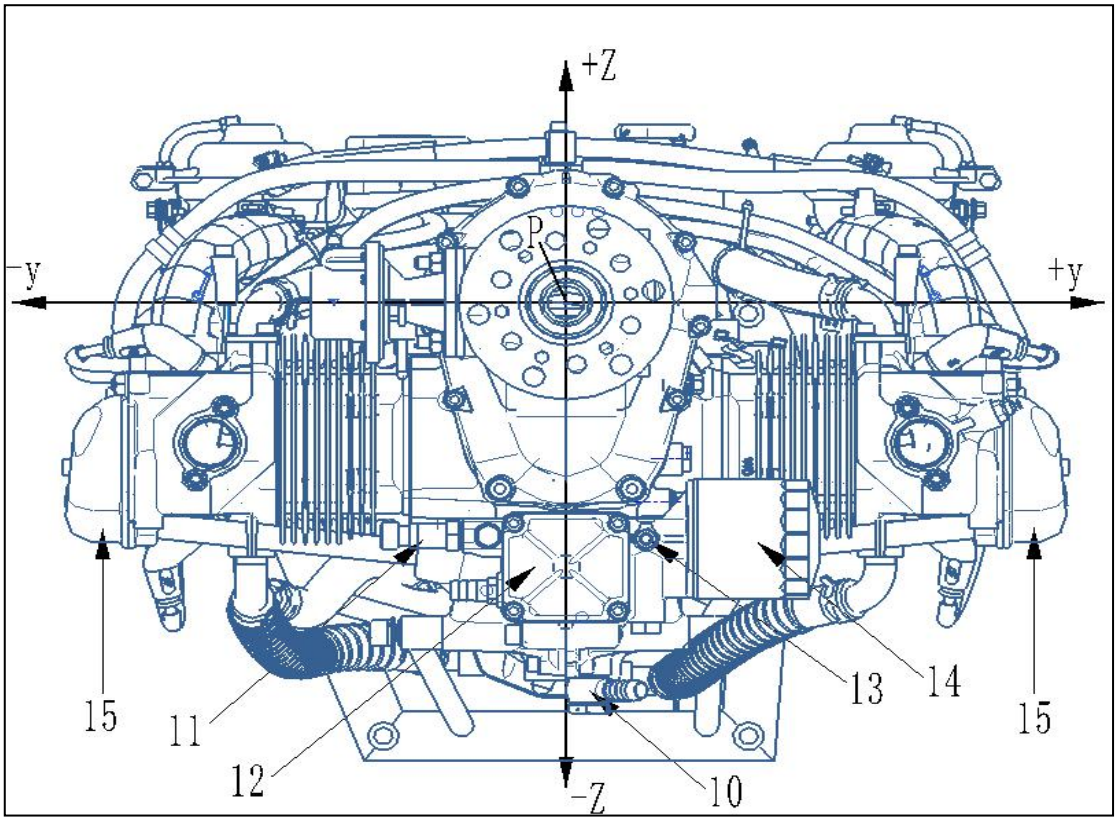

Fig. 2

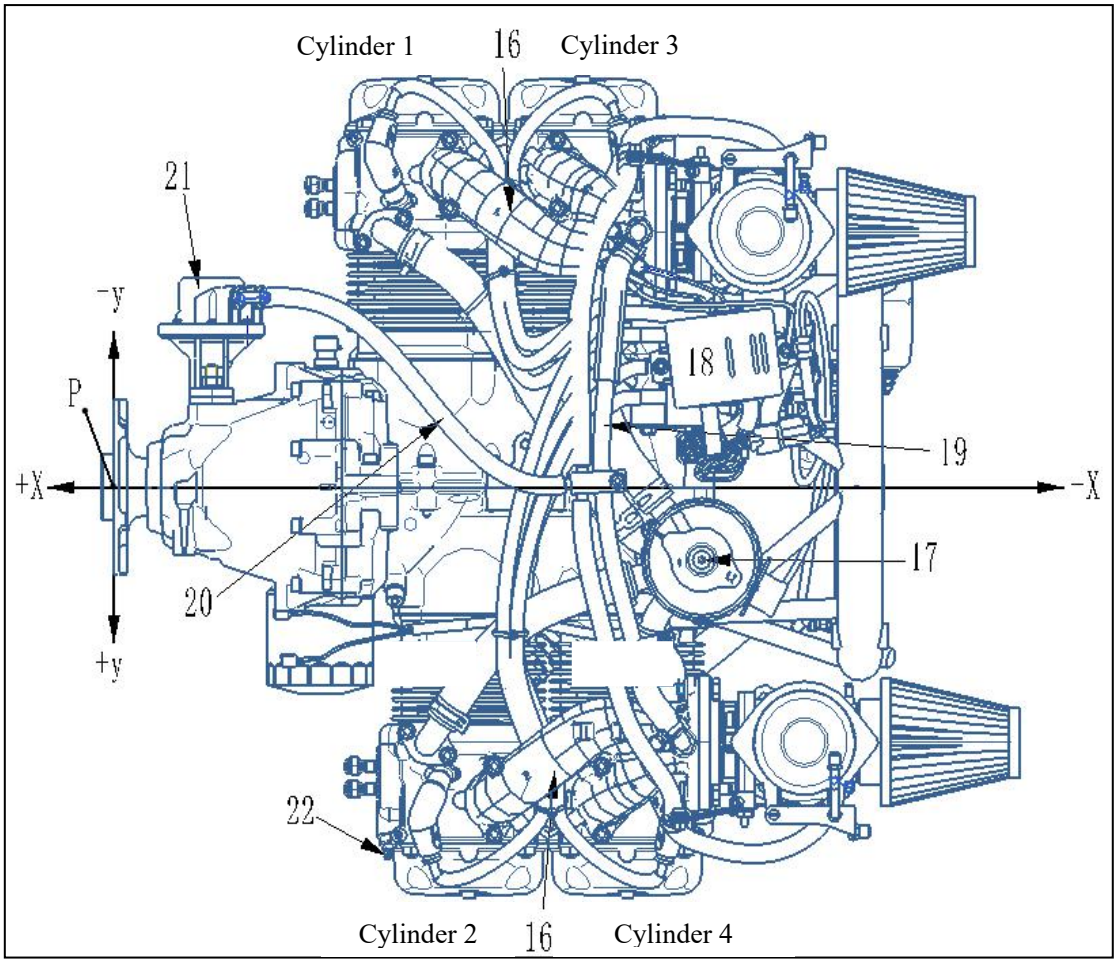

Fig. 3

(1) propeller flange
(2) propeller gear reducer
(3) crankshaft
(4) engine suspension frame
(5) magneto
(6) magneto cover
(7) start motor
(8) carburetor
(9) air filter
(10)hose nipple
(11) oil pressure sensor
(12) oil pump
(13) oil temperature sensor
(14) oil filter
(15) valve cover
(16) intake manifold
(17) expansion tank assy
(18) electronic module
(19) compensating tube assy
(20) oil pipeline
(21) mechanical fuel pump
(22)Cylinder temperature sensor

6) Technical data

To maintain clarity, only data relevant for engine installation and operation will be stated in the Manual.

NOTE: Connecting dimensions, filling capacities, drive and reduction ratios, electric output etc. can be found in the respective chapter of engine installation or other relevant engine documentation.

6.1) Operating limits

1. Engine speed

Take off r/min…….5800 r/min (5 min.)

Continuous max. power r/min……...5500 r/min

Idle speed……..(1600±100) r/min

2. Acceleration

Operation limits under the circumstance of 0 or neg. gravity acceleration

Neg. g……continuous 5s with -0.5 gravity acceleration

3. ceiling height

Max……..3500m

4. Oil pressure:..... .....see sec. 11.2.

5. Oil temperature:.....see sec. 11.2.

6. Cyl. head temperature:.....see sec. 10.2.

7. Exhaust gas temperature:…..... .....see sec. 9.3

8. Range of starting temperature

Max……. 50℃

Mix…… -40℃

NOTE: **When starting at temperature within −40℃～−10℃,Can use auxiliary equipment to raise temperature.**

9. Fuel pressure:.....see sec. 12.2.

10. Banking of plane deviation from the effective vertical: See Fig. 4

Max……20 °

NOTE: With this consideration the engine is properly lubricated in all flight profiles.

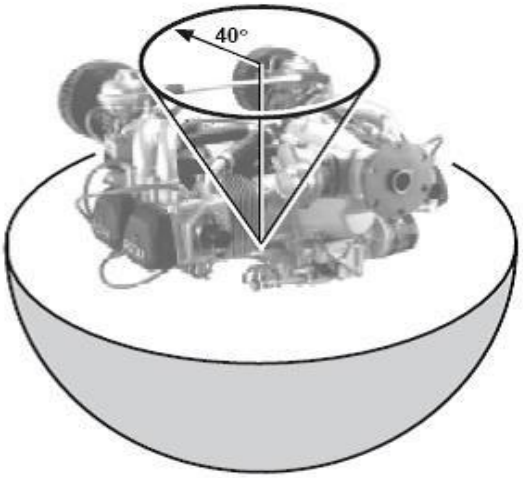

Fig. 4

6.2) Installation dimensions (all dimensions in mm)

	Standard engine version		
	Pos.(+)	Neg.(-)	Total Σ
Max. dimension in x-axis(mm)	8.5	-657.4	665.9
Max. dimension in y-axis(mm)	289.3	-289.3	578.6
Max. dimension in z-axis(mm)	119.0	-293.1	412.1

6.3) Weights

Weight index of engine:

C80.....60kg

(Do not contain accessory and operating medium)

Contain parts:

Overload clutch : 1.7kg

Air filter(2): 0.3kg

Not contain parts:

Water cooler: 1.2kg

Oil cooler: .....1.2 kg

Oil tank: 1.74kg

Oil tank（With liquid level sensor）: 2.38kg

Exhaust system assembly: 3.8kg

Overflow bottle: 0.14kg

6.4) Centre of gravity of engine and standard equipment

	engine
Centre of gravity in x-axis(mm)	-316
Centre of gravity in y-axis(mm)	-5
Centre of gravity in z-axis(mm)	-83

6.5) Moments of inertia

（kg cm^2）	ZSC80
X1-X1	11600
Y1-Y1	11390
Z1-Z1	18200

7) Preparations for engine installation

CAUTION: The stated directives are measures to pay CAUTION to at engine installation to prevent any accidents and engine damage.

7.1) Transport

The engine to be lifted by two hooks or straps around the middle of the intake manifolds.

7.2) State of delivery

The engine is fixed on the wooden plate by 4 M10X20 blots through the iron angle.

7.3) Engine preservation

The engine is preserved at Zongshen Aero Engine thus warranting proper protection against corrosion for 3 years after date of delivery from Zongshen.

This warranty is subject to the following conditions:

-the engine has to be stored in the packing as supplied by Zongshen Aero Engine.

-the covers on various openings must not be removed.

-engine has to be stored in a suitable place.

If the engine is stored for a period longer than 12 month, perform every 3 months the tasks presented below:

-unload 3 M6*16 screws(1)(Fig. 5), move ignition cover(4). Manually rotate the fly wheel(6) by screw(5) 3 rounds anticlockwise. Install ignition cover after change the position. Tighten the screws in 10N•m.

-Check the erosion (such as propeller shaft). If there is any erosion happened, send it to authorized overhaul department to handle.

NOTE: engine in this situation should not be maintained or sent to maintenance department.

-Repack it in the same way of original package.

WARNING: The preservation is not longer than 3 years with original package. Only allowed by Zongshen Aero Engine store the engine longer than 3 years is permitted, or engine should be transferred to Zongshen for a check.

NOTE: No problem exists when test is done after protection and preservation.

Fig. 5

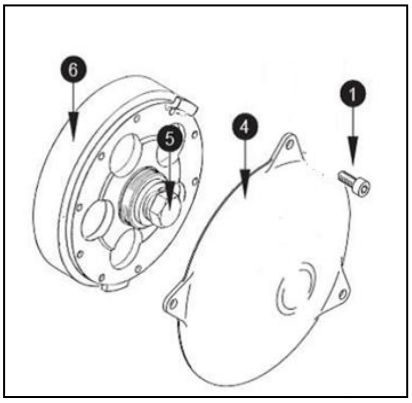

7.4) Protective covering

All openings are protected against ingress of contamination and dampness. It is recommended not to remove these plugs until installation of the specific feed line.

NOTE: If the engine will be sent to the manufacturer or distributor reuse transport equipment and replug openings.

List of protective covering:

-cylinder head exhaust socket:.....4x exhaust plug

-oil supply :.....1x each cap

-Crankshaft oil outlet :.....1x each cap

-Mechanical fuel pump fuel supply and air vent:.....2x cover

-Carburetor air vent:.....2x cover

-water pump:.....1x each cap

-expansion tank(water in and outlet):.....1x each cone plug

WARNING: Protective covering to be utilized for transport and at engine installation only. Before engine operation remove these protections.

8) Engine suspension and position

CAUTION: At installation of engine be aware of engine weight and assure careful handling.

The engine suspension is determined essentially by the aircraft design. Eight attachment points are provided on the engine (4 on engine and 4 on engine frame).

The installation into the aircraft is as generally practised by captive rubber mounts which ensure also to balance out vibrations and sound from engine to aircraft frame.

WARNING: If the engine suspension frame supplied by Zongshen Aero Engine is not used or if modified, certification to the latest requirements such as CCAR or GJB has to be conducted by the aircraft manufacturer.

Therefore it is recommended to use the Zongshen engine suspension frame and the 4 stated attachment points R2, L2, R3 and L3.

WARNING: At least 4 of the eight anchorage points must be used in a side symmetrical pattern of the left (L) and right (R) side.

8.1) Definition of attachment points

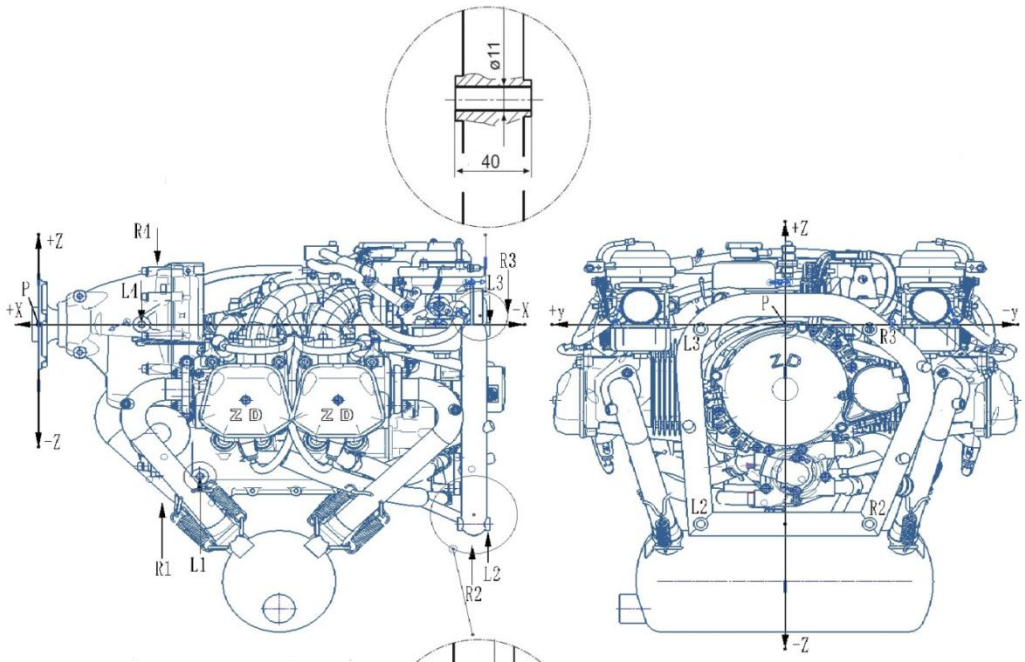

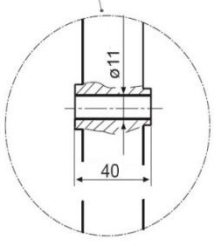

	Attachment point			
	1L	1R	4L	4R
Thread spec	M10			
Minimum thread length	25mm(1*)			

	Coordinate axis		
Mounting point	X- axis	Y- axis	Z- axis
L1	-200.8	-71.0	-211.0
R1	-200.8	71.0	-211.0
L2	-562.0	105.0	-277.0
R2	-562.0	-105.0	-277.0
L3	-562.0	105.0	-7.0
R3	-562.0	-105.0	-7.0
L4	-128.3	-71.0	0.0
R4	-128.3	71.0	0.0

	Attachment point			
	1L	1R	4L	4R
Max allowable stress at X-Y-Z axis	5000		1900	
Max allowable bending moment at X-Y-Z axis	77		39	

	Attachment point			
	2L	2R	3L	3R
Max allowable stress at X- axis	5000			
Y- axis	2000			
Z- axis	3000			
Max allowable bending moment at X-Y-Z axis	100			

Fig. 6

WARNING: The engine suspension to be designed by the aircraft or fuselage manufacturer such that it will carry safely the maximum occurring operational loads without exceeding the max. allowable-forces and moments on the engine attachment points.

WARNING: Tighten all engine suspension screws as specified by the aircraft manufacturer.

8.2) Permissible fitting positions

To simplify the matter, reference is made only to the 2 engine attachment points R1, L1

and the 2 turbo charger attachment points R(T)2 and L(T)2.

Location of the 2 turbo charger attachment points R(T)2 und L(T)2.

NOTE: All dimensions to point of reference (P) and the system of coordinates remain unchanged.

	Axis		
point	X	Y	Z
L(T)2	-414.3	71.0	-211.0
R(T)2	-414.3	-71.0	-211.0

The following details of engine position are with reference to aircraft on ground, ready for take off.

-engine suitable for propeller in tractor or pusher arrangement,

-propeller shaft above cylinders.

WARNING: For upside down installation of the engine, the lubrication system, fuel system and the cooling system are unsuitable!

Longitudinal axis:

-The center of the attachment points L1 and L(T)2 must be on axis x2 parallel to the x axis.

Allowable pitch deviation of parallelism of axes:

max. 6 ° counter-clockwise, on ground

max. 10 ° counter-clockwise, in operation

max. 30 ° clockwise

WARNING: On installations with fuel tank located above carburetor level combined with badly closing carb float valve, fuel could pass into cylinders at more than 6 ° decline of propeller shaft axis after longer periods of downtime.

To prevent a possible hydraulic shock at engine start, ensure proper closing of float valves.

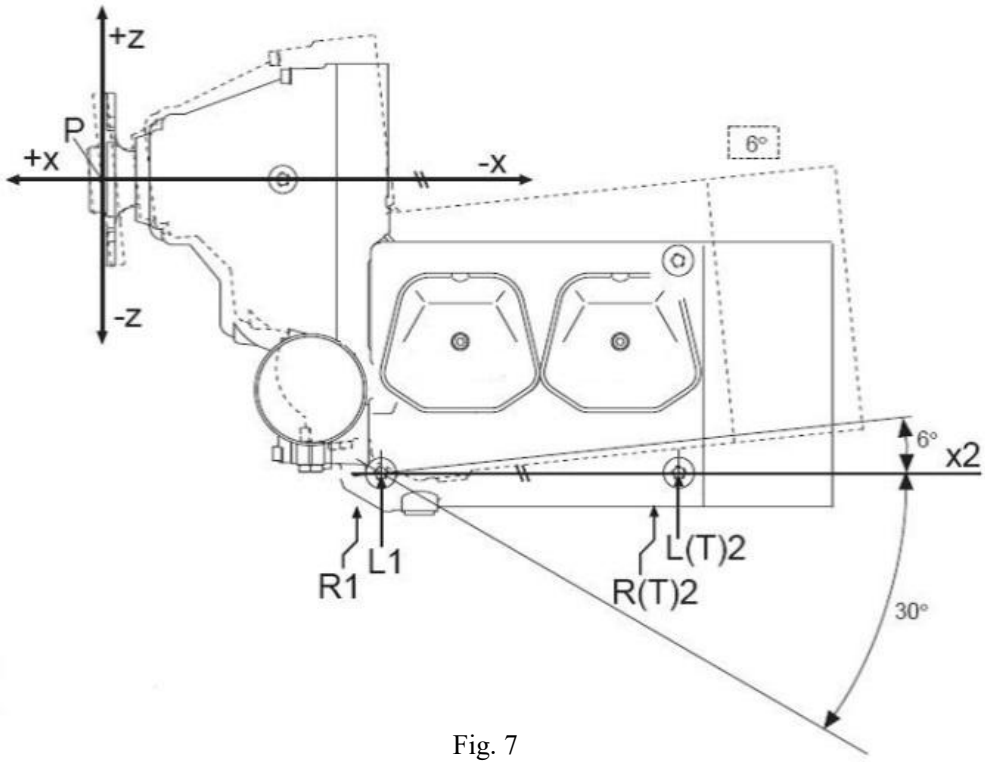

Fig. 7

Propeller axis:

-The centers of attachment points L1 and R1 must be on an axis Y2 parallel to y-axis.

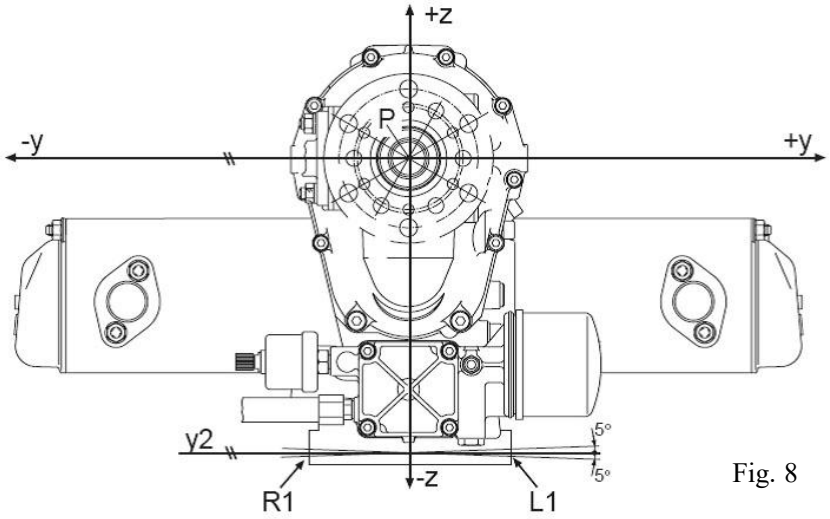

Fig. 8

Tolerated roll deviation of parallelism:..... ± 5 °

Vertical axis:

-y-axis must be square to the longitudinal axis of the aircraft.

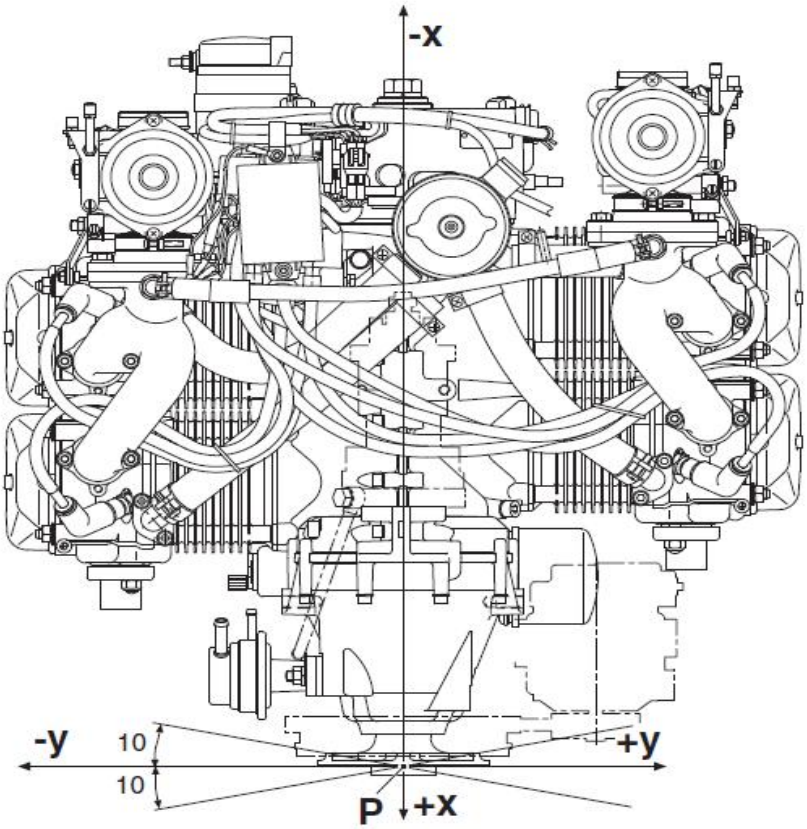

Fig. 9

Tolerated roll deviation of Yaw tolerance: ±10 °

8.3) General directives for engine suspension

Rubber mounts to be used between engine and aircraft frame to neutralize vibrations. Damping elements as generally used in the aircraft industry are suitable.

NOTE: The fig. 10 shows rubber mount.

WARNING: All elements to balance out vibrations have to be of captive design.

NOTE: With suspension on the 4 top lugs L3, R3, L4 and R4 only, the tilting moment due to the pull of the propeller will be avoided while, if attached on the bottom lugs only, the moment of tilting has to be taken care of accordingly.

WARNING: The rubber mounts to neutralize vibrations and all the engine suspension components not in the supply volume must be ground run tested to the specified loads and for vibration behavior. Certification to the latest requirements such as CCAR or GJB has to be conducted by the aircraft manufacturer.

CAUTION: The engine suspension has to be designed to prevent any excessive engine movement and to minimize noise emission and vibration on air frame side.

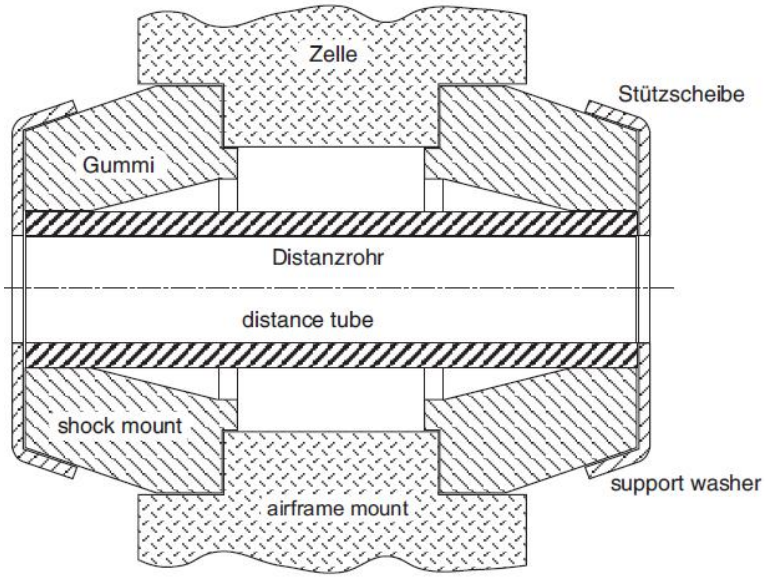

Fig. 10

9) Exhaust system

9.1) System introduction

Exhaust system assembly(see Fig.11) and exhaust system accessories (see section 9.4) can be selected according to customer requirements.

WARNING: If the Zongshen exhaust system is not employed or if modified, certification to the latest requirements such as CCAR or GJB has to be conducted by the aircraft manufacturer.

NOTE: Modifications are permissible only if agreed with by Zongshen Aero Engine. As an exception, the exhaust tail pipe can be modified to the following requirements:

-Mean bending radius of a tail pipe: min. 40 mm.

-Exhaust bend, inside diameter: min. 28 mm.

-Medium tube length: max. 500 mm

CAUTION: At a medium tube length of 250 mm and more, the tail pipe must have additional support.

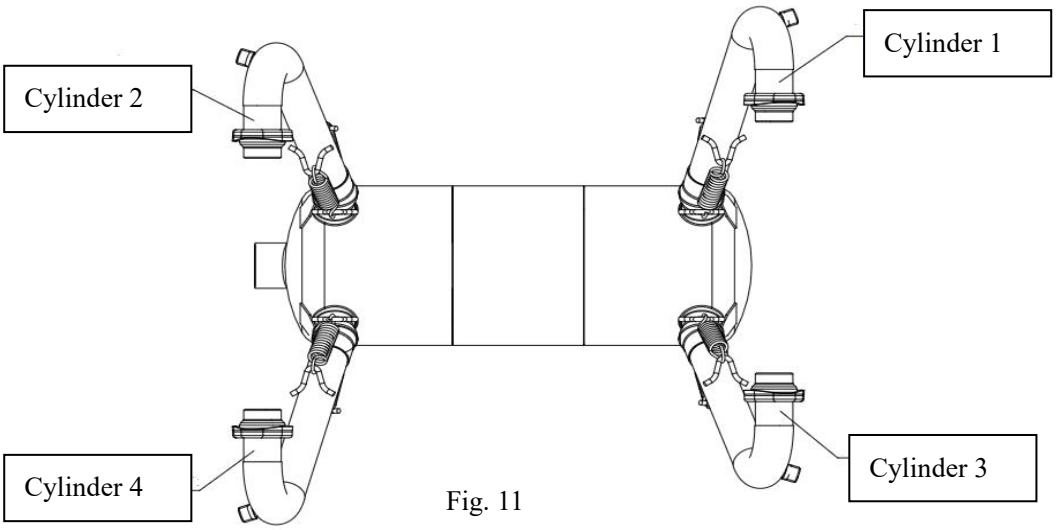

Fig. 11

CAUTION: **vibration due to improper installation and maintenance is the most common cause of exhaust system damage.**

Exhaust port position：

	Coordinate axis		
Exhaust port Q1point	**X- axis**	**Y- axis**	**Z- axis**
	-299.3	205.8	-394.5

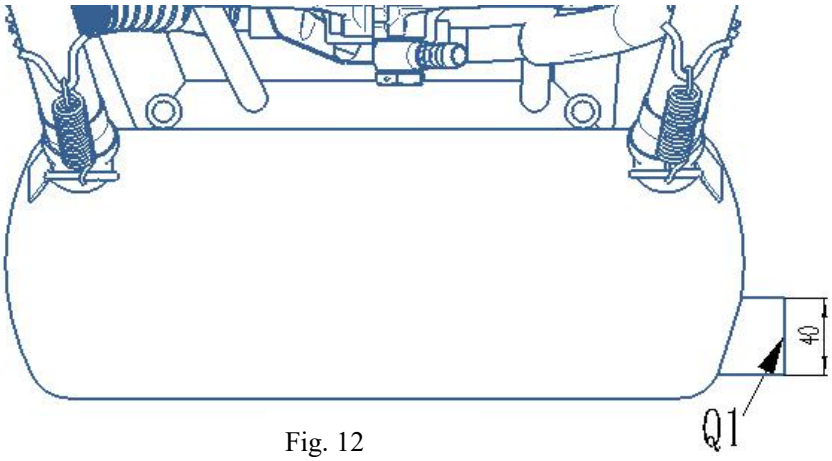

Fig. 12

The muffler exhaust shock absorbing spring should be fixed with soft steel wire to prevent falling off.

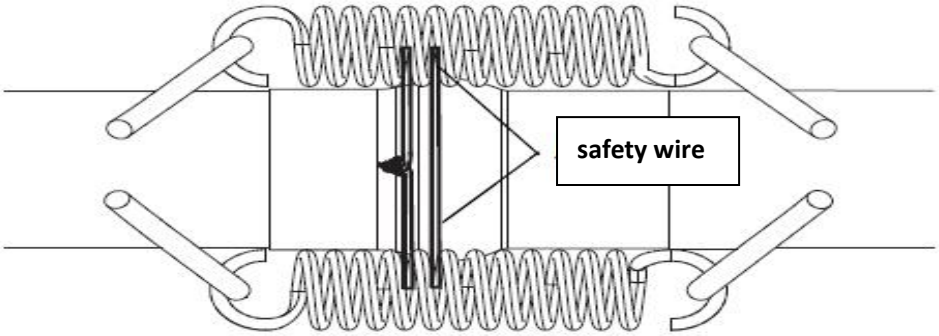

Fig. 13

9.2) Exhaust system installation position

The shape and configuration of the exhaust system essentially depends on the free space available in.

Each cylinder head is provided with two M8x43 double-screw bolt for connecting the exhaust system.

Exhaust double-screw bolt point

NOTE：All point are from zero reference point(P).

	Coordinate axis （mm）		
Location	X axis	Y axis	Z axis
Cylinder 1	-160	-196	-82
	-160	-212	-113
Cylinder 2	-192	196	-82
	-192	212	-113
Cylinder 3	-408	-196	-82
	-408	-212	-113
Cylinder 4	-438	196	-82
	-438	212	-113

	Attachment point
Max. permissible forces on x，y and z axis	1000N
Max. permissible bending moment on x，y and z axis	40 N.M

9.3) Limits of operation

The exhaust gas temperatures (EGT) have to measured at the initial engine installation in an aircraft and must be verified in the course of test flights

Readings of EGT taken approx. 100 mm from exhaust flange connections.

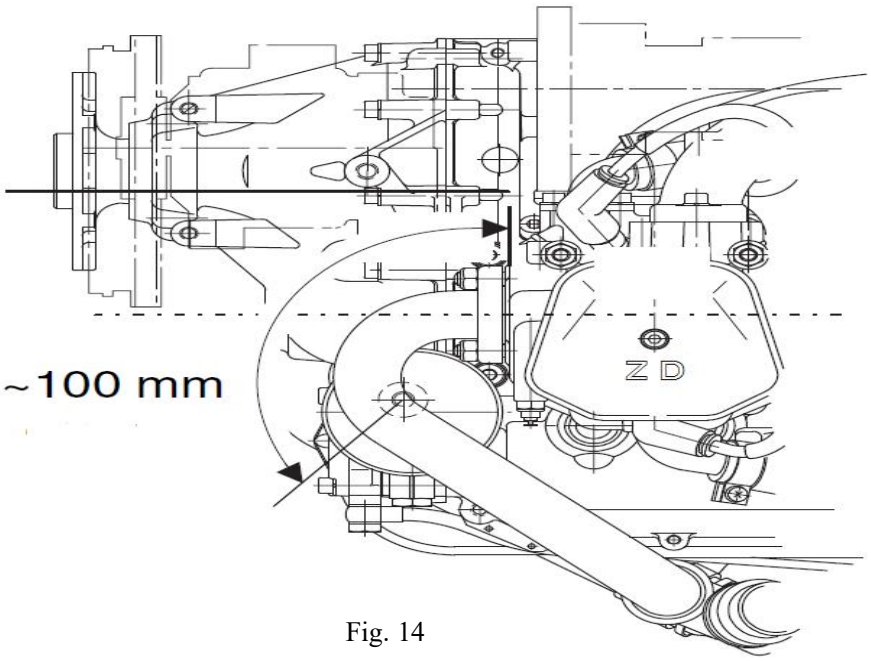

Fig. 14

Exhaust gas temperature:

Max.：……880℃

9.4) Exhaust parts

Exhaust elbow (see Fig.15)，Material/thickness：X15 CrNiSi20-12(DIN 1.4828)(stainless steel)；a=1.5 mm（0.06 in）。

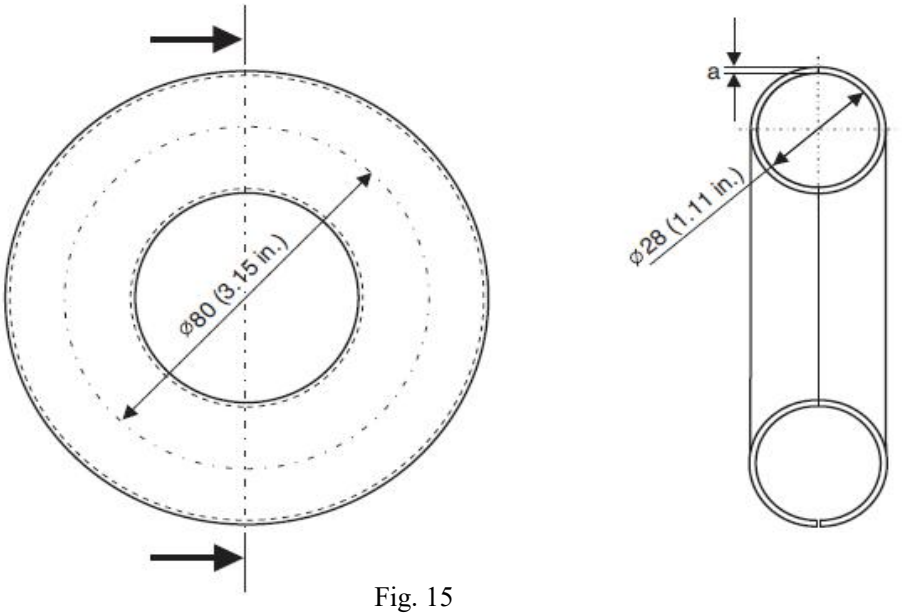

Fig. 15

Muffler assy. (see Fig 16)，Material/thickness：X6 CrNiTi 189(DIN 1.4541)(stainless steel)； a=1 mm（0.04 in）。

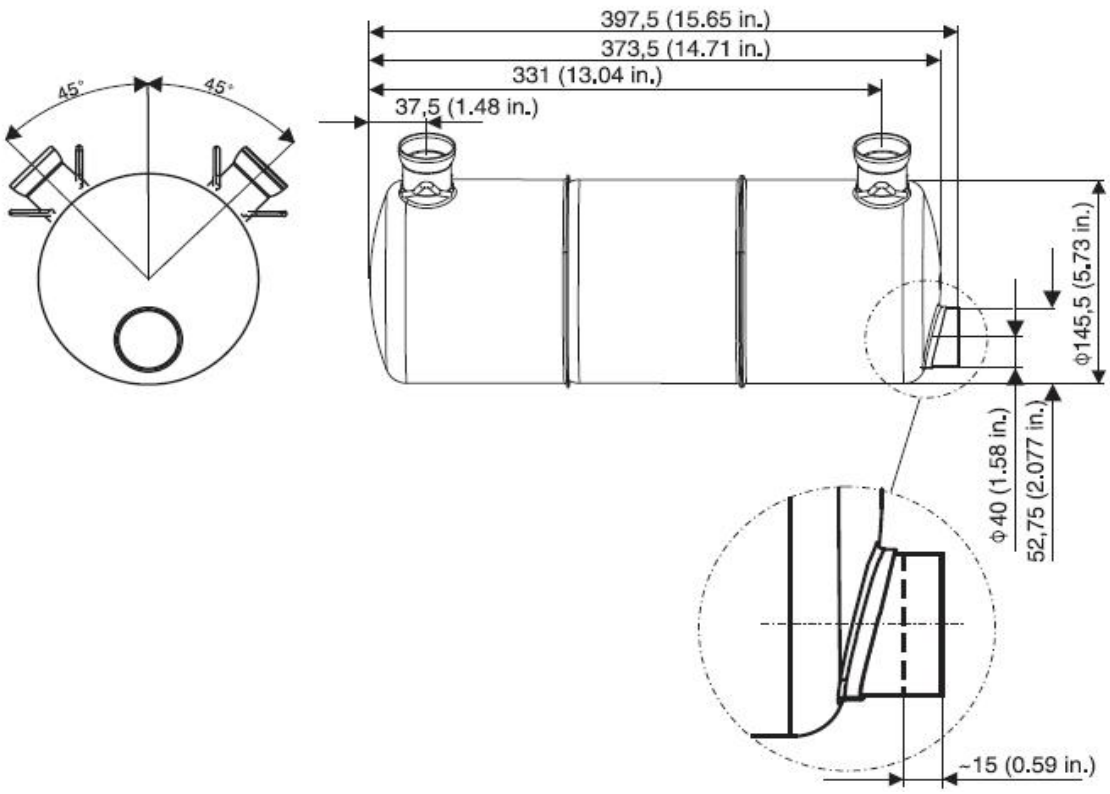

Fig.16

Exhaust elbox(tailpipe) (see Fig 17)，Material/thickness：X5 CrNi 189(DIN 1.4301)(stainless steel)； a=1 mm（0.04 in）。

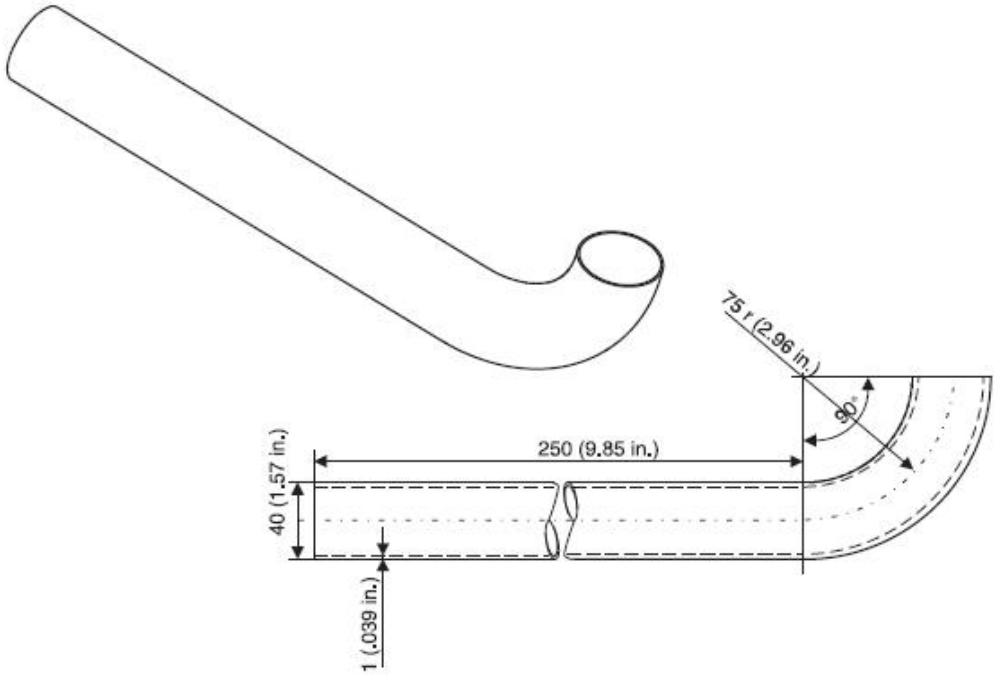

Fig.17

Ball joint,male (see Fig 18)，Material/thickness：X15CrNiSi20-12(DIN 1.4828)(stainless steel)； a=1 mm（0.04 in）。

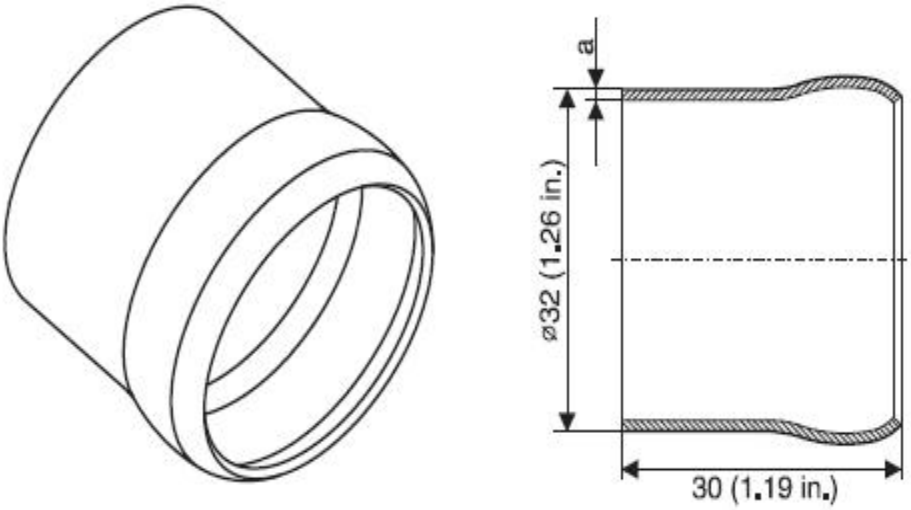

Fig.18

Exhaust joint (see Fig 19)，Material/thickness：X15CrNiSi20-12(DIN 1.4828)(stainless steel)；a=1.5 mm（0.06 in）。

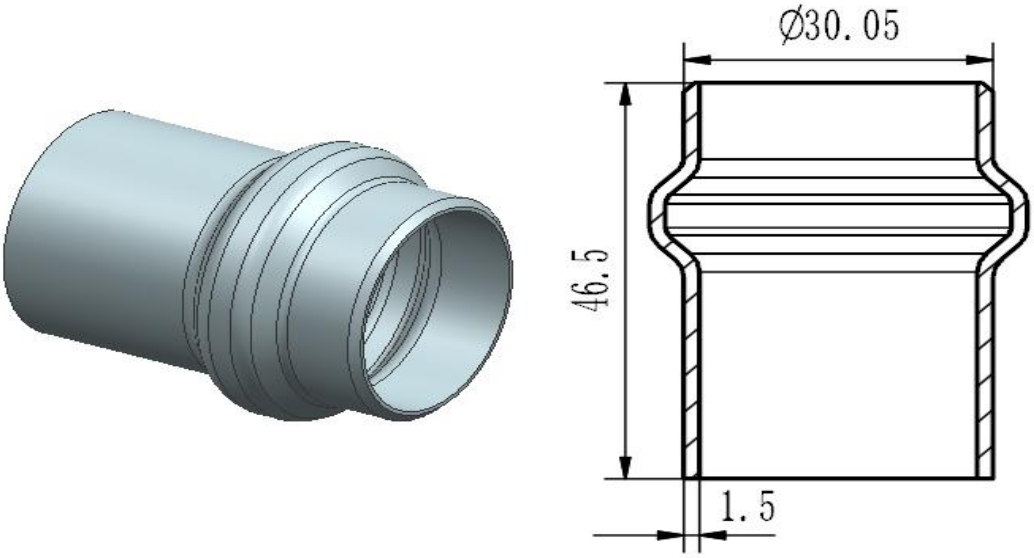

Fig.19

Exhaust tube (see Fig 20)，Material/thickness：X15 CrNiSi20-12(DIN 1.4828)(stainless steel)；a=1 mm（0.04 in）。

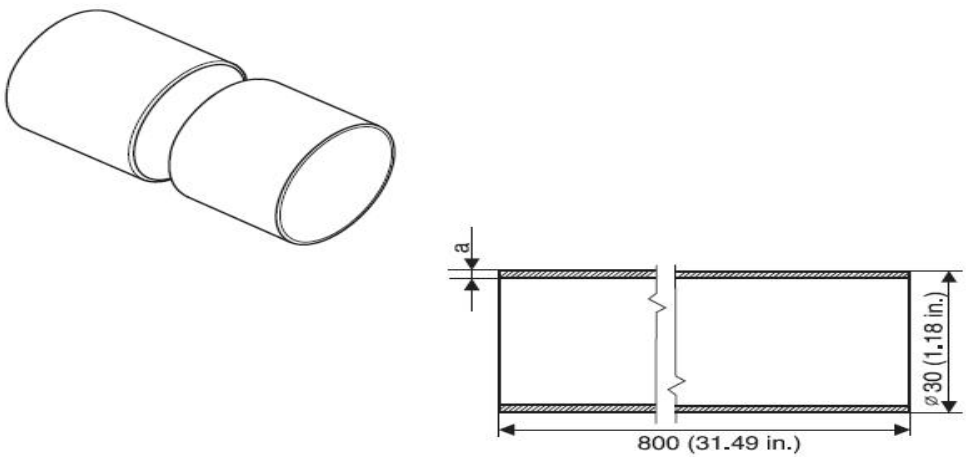

Fig.20

muffler spring (see Fig 21)，Material :82B.

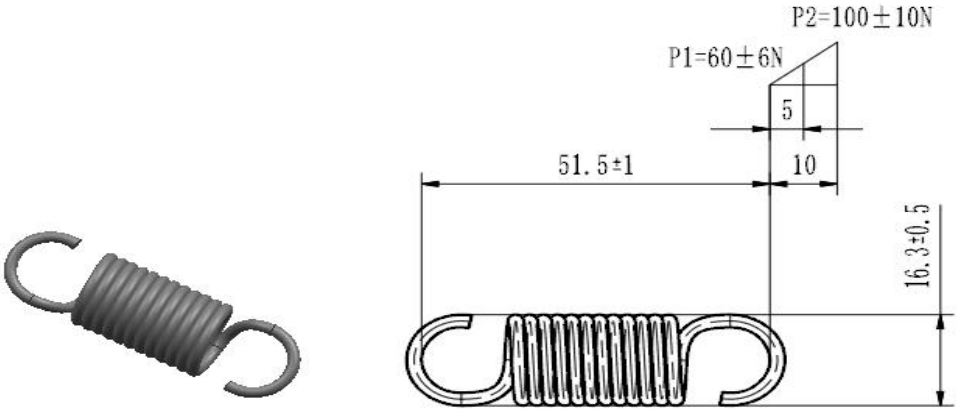

Fig.21

Exhaust elbow connection hook (see Fig 22)， Material:310S-ASTM A276-2015(substitute material：X15 CrNiSi20-12).

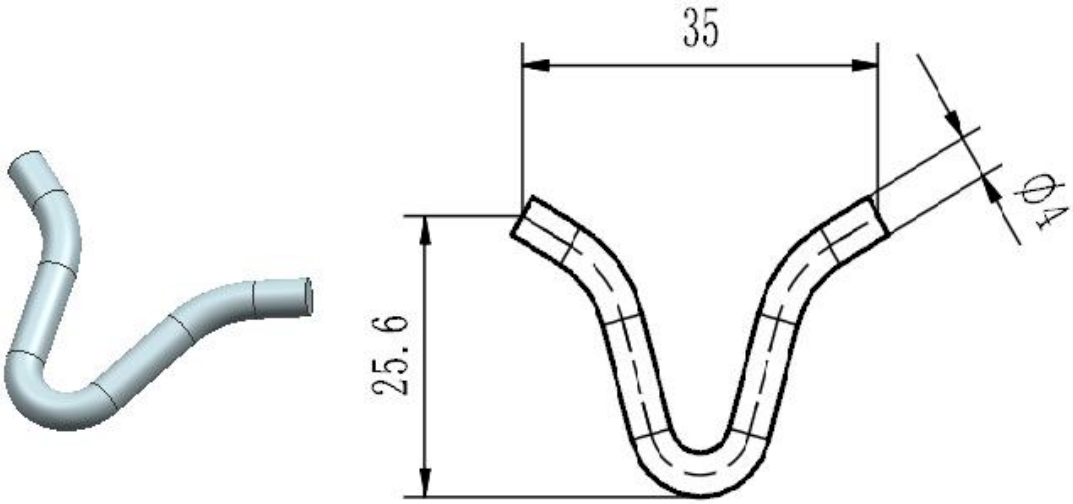

图 22

Exhaust pipe flange (see Fig 23)， Material: 310S-ASTM A276-2015(substitute material：X15 CrNiSi20-12)。

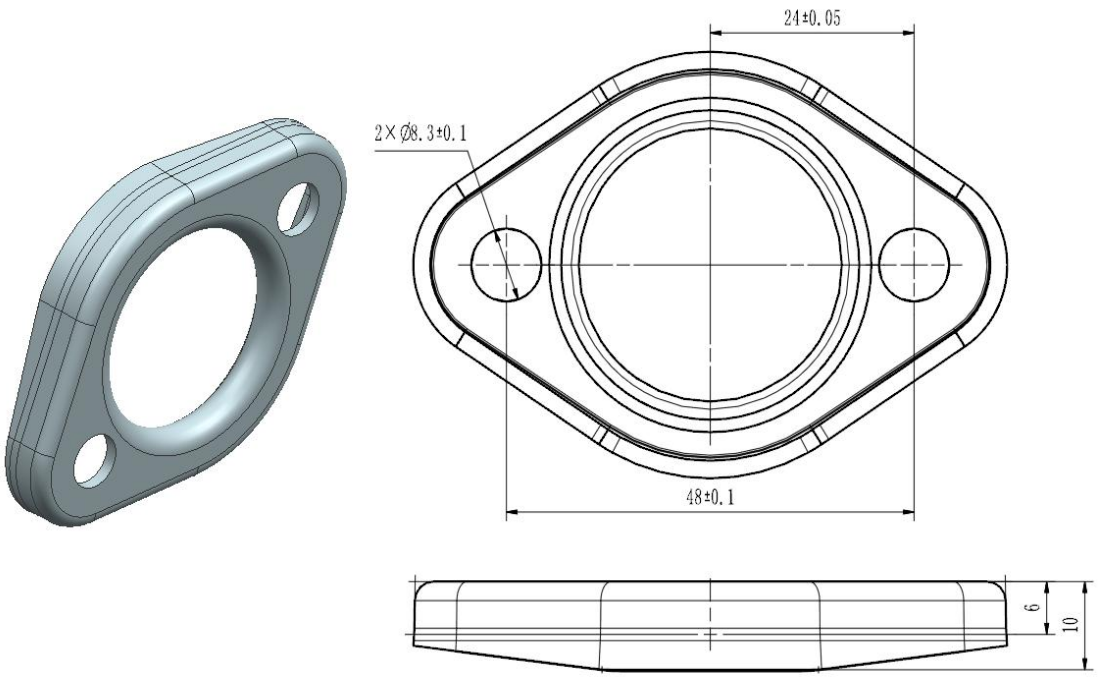

Fig.23

10) Cooling system

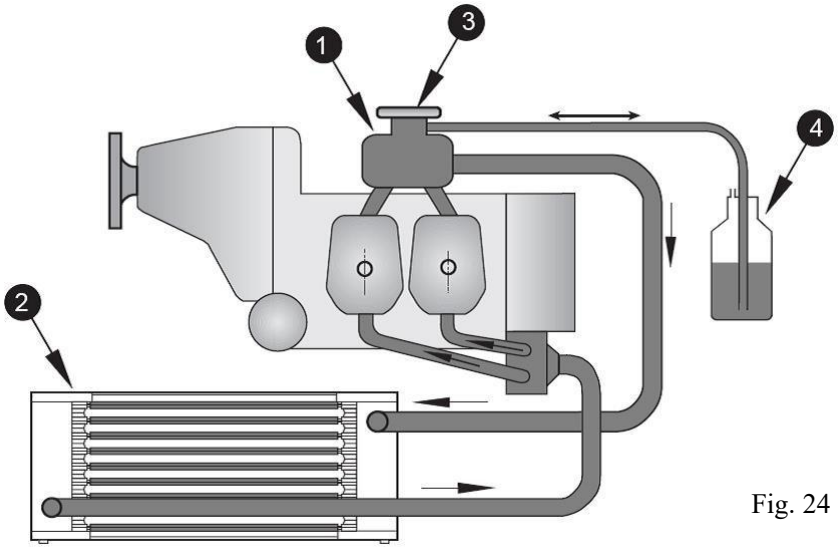

Fig. 24

10.1) Description of the system

The cooling system of the ZSC80 is designed for liquid cooling of the cylinder heads and ram-air cooling of the cylinders.

The cooling system of the cylinder heads is a closed circuit with an expansion tank.

The coolant flow is forced by a water pump, driven from the camshaft, from the radiator to the cylinder heads. From the top of the cylinder heads the coolant passes on to the expansion tank (1). Since the standard location of the radiator is below engine level, the expansion tank located on top of the engine allows for coolant expansion.

The expansion tank is closed by a pressure cap (3) (with pressure relief valve and return valve). At temperature rise and expansion of the coolant the pressure relief valve opens and the coolant will flow via a hose at atmospheric pressure to the transparent overflow bottle (4). When cooling down, the coolant will be sucked back into the cooling circuit.

The shape, size and location of one or more radiators depend mainly on the space available.

No attachment point is provided for radiator on the engine.

10.2) Operating Limits

Coolant temperature: max.....120℃

Cylinder head temperature: max.....135 ℃

WARNING: The temperature is measure at the cylinder head.

The max temperature of cylinder head is obtained through the test. It's decided by the installment of engine (the propeller is pusher or tractor).

10.3) Requirements on the cooling system

CAUTION: All components of the cooling system have to be secured suitably.

WARNING: The size and layout of the cooling system must be designed to keep the heat of the operating temperatures within the specified limits. To minimize flow resistance employ a radiator with low flow resistance and parallel flow as realized on the original Zongshen Aero Engine radiator and use short hoses and pipelines.

Coolant hoses:

-temperature durability: min. 125℃

-pressure durability: min. 5 bar

-nom. inside dia : 25 mm

-bending radius: min. 175 mm

-material: Suitable for 100 % Glycol and antifreeze agents.

NOTE: Instead of long hoses, aluminium pipes may be used.

10.4) Size and position of connections

-expansion tank (1) with radiator cap (2)

to radiator (2):	outside dia. 25 mm
slip-on length	max. 22 mm
to overflow bottle (4):	outside dia. 8 mm
slip-on length	max.15 mm
water inlet bend(5):	outside dia. 27 mm
slip-on length	max.19 mm

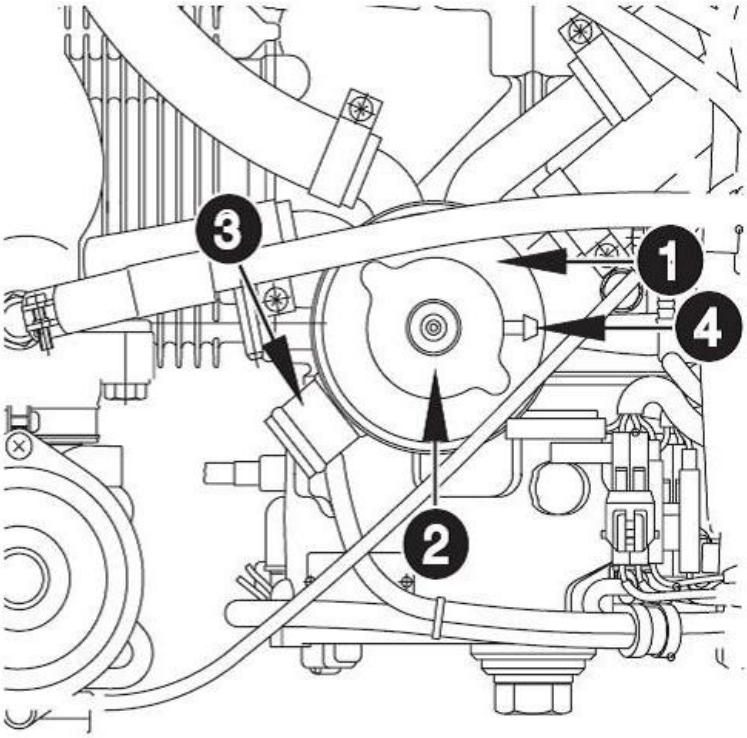

Fig.25

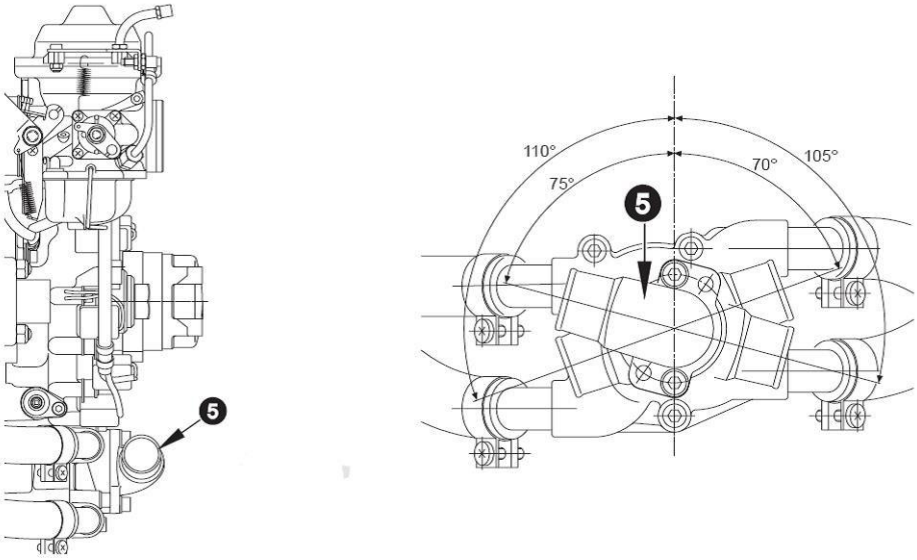

Fig.26

NOTE: Choose between six possible fitting positions of water inlet bend appropriate to specific installation. The inlet bend is attached to the water pump by two Allen screws M6x20 and lock washers. Tighten screws to 10 Nm.

CAUTION: Utilize total slip-on length for hose connection. Secure hoses with suitable spring type clamp or screw clamp.

10.5) Coolant capacity

4 cylinder heads:.....560 cm^3

water pump:.....100 cm^3

expansion tank:.....380 cm^3

2 m coolant hose (18 mm inside dia.) :.....500 cm^3

total coolant quantity in engine:.....approx. 1540 cm^3

10.6)feasible location and fitting position concerning radiator

The expansion tank (1) must always be positioned at the highest point of the cooling system.

CAUTION: If necessary, the radiator outlet opening (8) may be max. 1.5m above or below water inlet bend on water pump.

NOTE: On the standard engine version the expansion tank is fitted on top of the engine.

For proper operation of the cooling system the expansion tank (1) with pressure cap (2) has to remain for all possible engine positions on the highest point of the cooling circuit.

Additionally the system needs an overflow bottle (7) where surplus coolant is collected and returned back into the circuit at the cooling down period.

NOTE: For proper operation keep hose to overflow bottle as short and small as possible.

CAUTION: To warrant the proper operation of the cooling system the delivery head between overflow bottle and expansion tank must not exceed 250 mm.

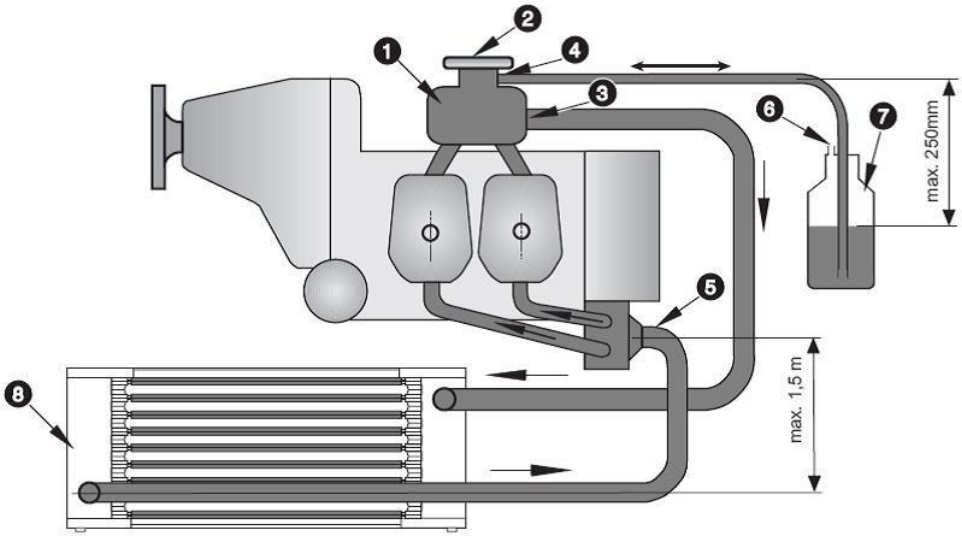

Fig.27

Requirements on the overflow bottle (7)

- transparent material
- unaffected by temperatures from - 40℃to +125℃
- resistant against 100% Glycol and any other anti freeze agent
- possible to vent

-the total volume is 0.8L， the volume is 0.63L when the liquid level is located at the Max scale line， the volume is 0.14L when the liquid level is located at the Min. scale line.

NOTE: The overflow bottle ought to be furnished with a label indicating function and content.

WARNING: Ensure that the overflow bottle will never be empty, otherwise air will be sucked into cooling circuit with a negative effect to safe operation of the engine.

10.7) General directives for the cooling system

Zongshen Aero Engine offers essential parts of the cooling system for this engine such as radiator and overflow bottle, etc. (details on parts list). Certification of parts to the latest requirements to CCAR or GJB has to be conducted by the aircraft manufacturer.

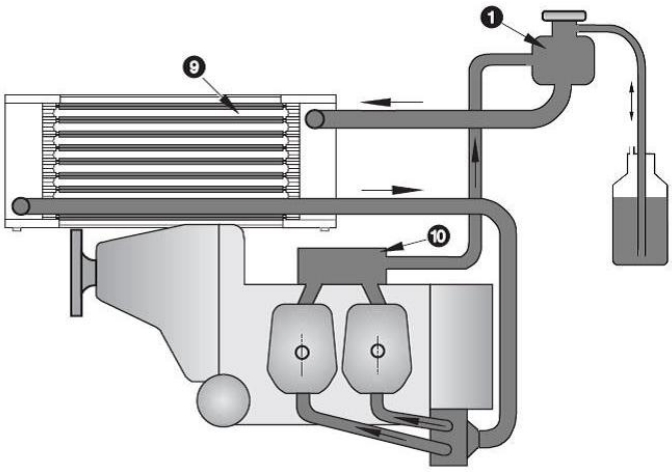

Fig.28

In an installation as depicted with the radiator (9) in a higher position than the standard supplied expansion tank, a water accumulator (10) has to be fitted instead of the expansion tank. Additionally a suitable expansion tank has to be installed at the highest point of the cooling circuit.

CAUTION: The size and type of radiator should be adequate to transfer thermal energy of approx. 25 kW at take-off power.

NOTE: Assessment data by experience. For troublefree operation at good airflow a radiator of at least 500 cm^2 area has to be used. The flow rate of coolant in the cooling system is approx. 55 L/min at 5500 r/min.

11) Lubrication system

11.1) Description of the system

The Zongshen Aero Engine engine is provided with a dry sump forced lubrication system with a main oil pump with integrated pressure regulator and an additional suction pump.

NOTE: The oil pumps are driven by the camshaft.

The main oil pump (3) sucks the motor oil from the oil tank (4) via the oil cooler (5) and forces it through the oil filter to the points of lubrication

After the lubrication position， the excess lubricating oil is accumulated at the bottom of the crankcase，and then the remaining lubricating oil is returned to the lubricating oil tank through the pressure of the channeling cylinder mixture gas.

The entire lubricating oil route is vented through the vent(7) on the oil tank.

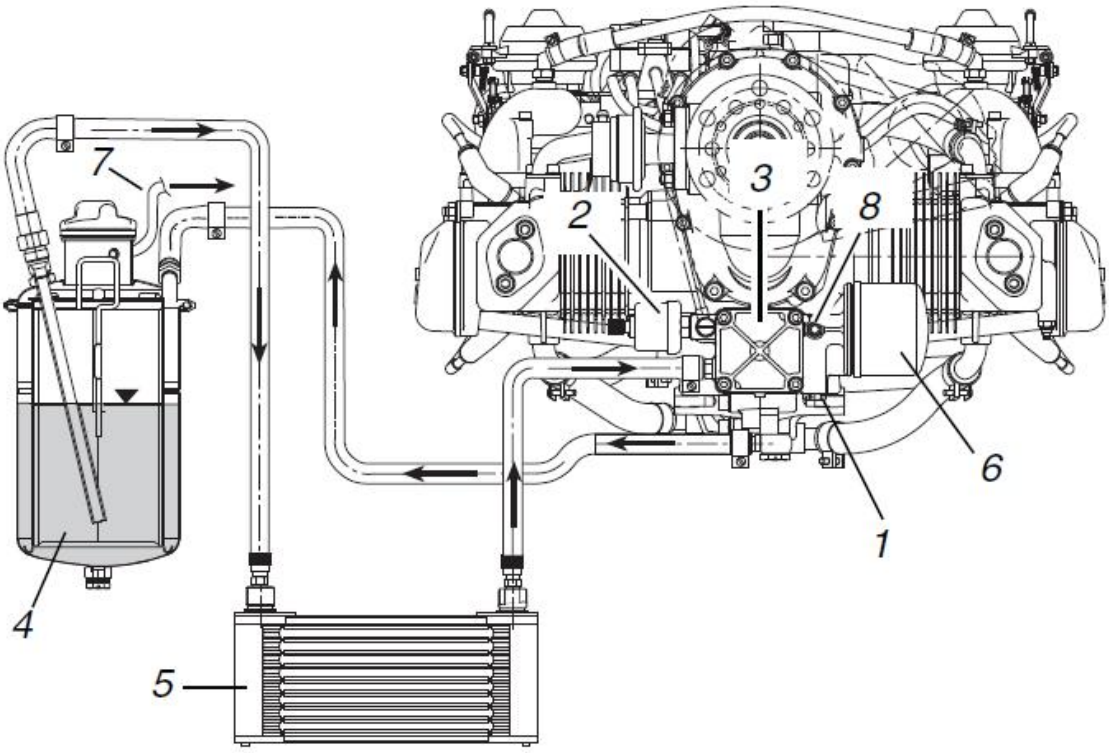

Fig. 29

For the completion of the lubrication system only the following connections need to be established:

Lubrication circuit engine (main oil pump)

oil tank (outlet)	to the	oil cooler
oil cooler	to the	oil pump (inlet)
oil return	to the	oil tank (inlet)
oil tank	to the	venting line

NOTE: In the serial version of the engine an oil tank is included, but no provision is made for attachment of an oil cooler.

WARNING: Certification of oil cooler and connections to the latest requirements such as CCAR and GJB has to be conducted by the aircraft manufacturer.

11.2) Limits of operation

WARNING: The lubrication system has to be designed such that operating temperatures will not exceed the specified limits.

Oil pressure: For oil pressure sensor see Fig. 17.3

Max.: 7 bar

(Note: it is allowable at the time of engine start.)

Min.: 1.5 bar

Normal: 2 bar ~5 bar

(Note: Inlet pressure is 0.3 bar lower than ambient pressure when throttle valve is totally open, which is measured at the place 100mm ahead of oil pump inlet.)

Oil temperature: Oil temperature sensor, see Fig. 17.2.

Max.: 130℃

Min.: 50℃

The optimum oil temperature: 90℃～110℃

WARNING: At operation below nominal oil temperature formation of condensate in the lubrication system might influence oil quality.

11.3) Requirements on the oil- and venting lines

Oil lines

-Temperature durability: min. 130℃

-Pressure durability: min. 10 bar

-Bending radius: min. 70 mm

-Minimum inside dia. of oil lines in reference to total length

length up to...1m min. 11 mm

length up to...2 m min. 12 mm

length up to...3 m min. 13 mm

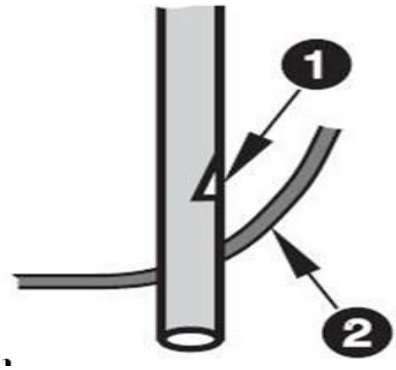

Fig. 30

Vent line of oil tank

-Route the line without kinks and avoid sharp bends.

NOTE: Water is a by-product of combustion. Most of this water will dissipate from the combustion chamber with the exhaust gases. A small amount will reach the crankcase and has to be disposed through the vent line of oil tank via oil return line.

-The venting line must be routed in a continuous decline or furnished with a drain bore at its lowest point to drain possible condensate.

-The vent line has to be protected from any kind of ice formation in the condensate. Protection by insulation, or routing in a hose with hot air flow or by furnishing vent line with a bypass opening before passing through cowling. See Fig. 18.

11.4) Connecting dimensions and location of connections

CAUTION: Utilize the full slip-on length for hose connections. Secure hoses with suitable screw clamp or by crimp connection.

11.4.1) Oil circuit

Oil pump(inlet) (1).....thread M18 x 1,5 x 11

NOTE: Suitable for use of a swivel joint. See Fig. 31,

Tightening torque:.....25 N.m.

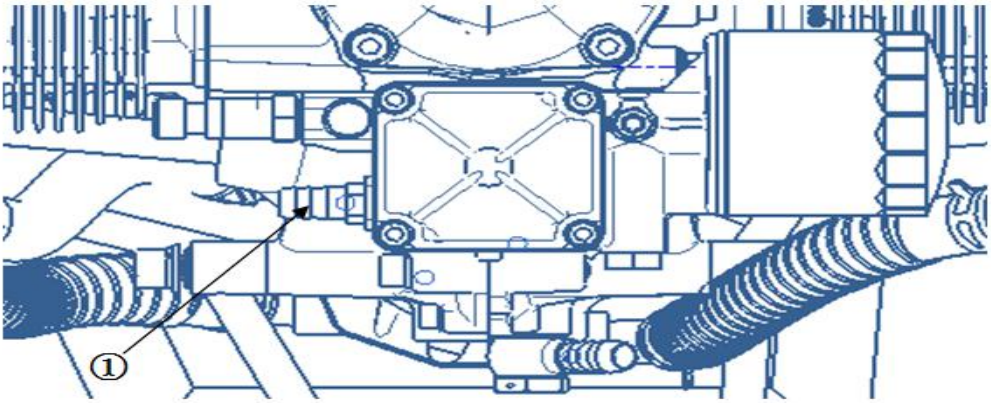

Fig. 31

Oil return

According to propeller configuration choose the appropriate connection for the oil return line.

Position 1 for tractor or 2 for pusher configuration.

-connection with slip-on connection (2):

outside dia.....12 mm

slip-on length.....max. 24 mm

Tightening torque of banjo bolt (3) M16x1.5x28:.....30 Nm

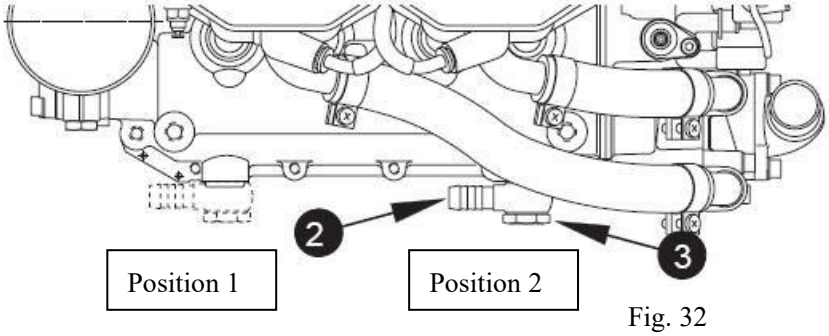

Fig. 32

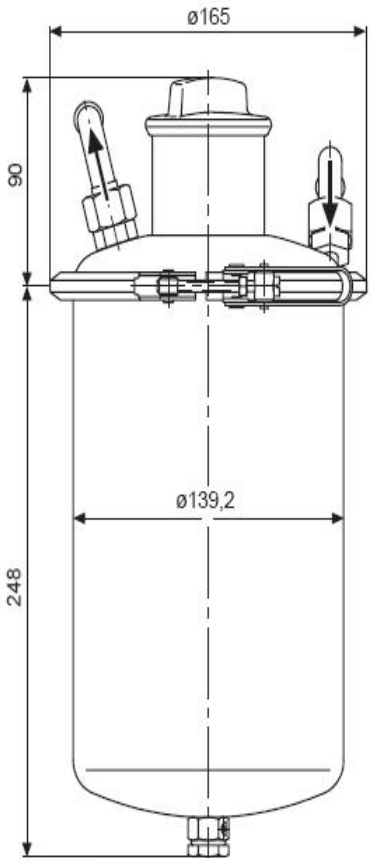

Fig. 33

11.4.2) Oil tank

The oil tank is furnished with 2 screw connections M18x1.5 and with a tapped hole (M10x1).

Connections for oil circuit (engine)

Oil inlet (6)and outlet (7) via standard swivel joint and connecting bend (8).

2x connecting bend 90 ° (8)

outside dia.....12 mm(.47 in.)

slip-on length.....max. 24 mm
tightening torque.....25 N.m
oil inlet and outlet connection with screw connection (9)
outside dia.....8 mm
slip-on length.....max. 15 mm

NOTE: In the standard supply volume the connection (12) is closed by the plug screw (13).

This screw plug(13) has to be removed and is replaced by the hose nipple (10), sealing ring (14) 10x14 and banjo bolt (11).

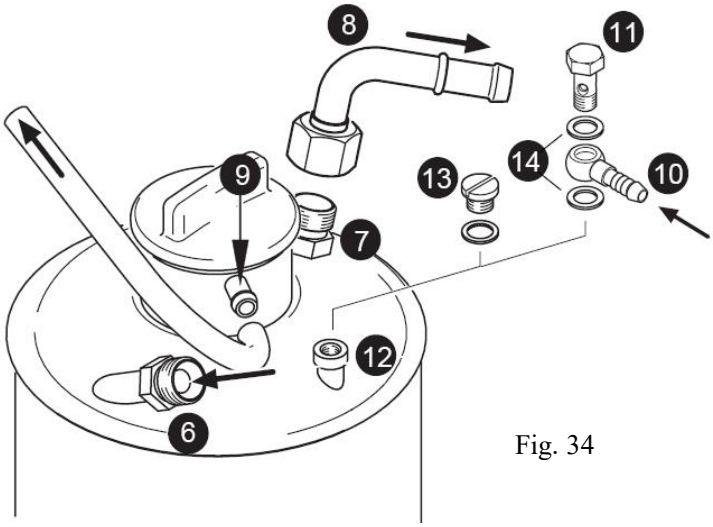

Fig. 34

11.4.3) Oil tank(with liquid level sensor)

The oil tank is furnished with 2 screw connections M18x1,5 and with a tapped hole (M10x1).

Connections for oil circuit (engine)

Oil inlet (6)and outlet (7) via standard swivel joint and connecting bend (8).
2x connecting bend 90 ° (8)
outside dia.....12 mm
slip-on length.....max. 24 mm
tightening torque.....25 N.m
Oil inlet and outlet connection with screw connection:
outside dia.....8 mm
slip-on length.....max. 15 mm

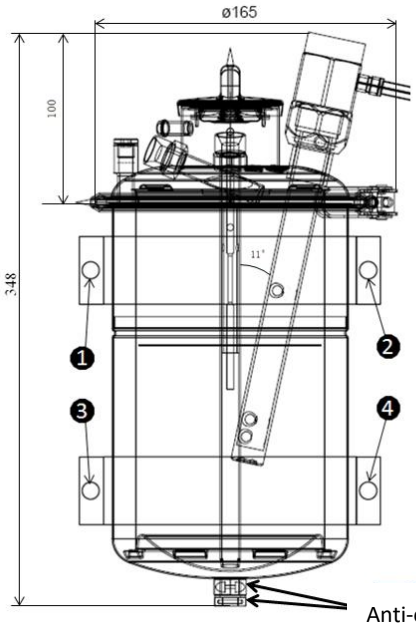

Anti-off hole
Diameter:2mm

Fig. 35

NOTE: In the standard supply volume the connection (12) is closed by the plug screw (13).

This screw plug(13) has to be removed and is replaced by the hose nipple (10), sealing ring (14) 10x14 and banjo bolt (11).

11.5) Feasible position and location of the oil tank

-The longitudinal axis z3 to be parallel to z-axis of the system of coordinates. Tolerated deviation of parallelism: ±10°

NOTE: Above notice is valid for both planes.

-The oil tank (1) has to be positioned in its z-axis such that the oil level (2) is always between 0 and -400 mm on the z-axis.

WARNING: At higher location of the oil tank oil might trickle through clearances at bearings into crankcase during longer periods of engine stop. If fitted too low it might badly affect the oil circuit.

-Install the oil tank free of vibrations and not directly to the engine.

-Oil tank cover (3) and oil drain screw to be easily accessible.

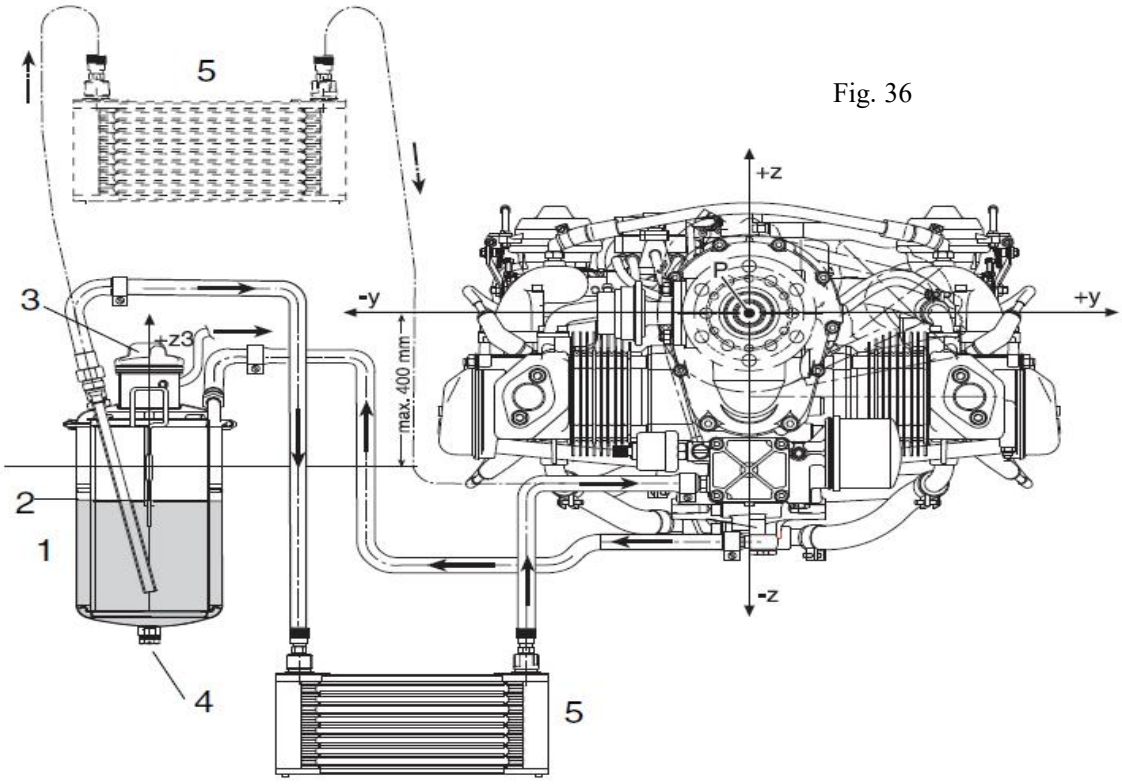

Fig. 36

11.6) Feasible position and location of the oil cooler

-On principle the oil cooler has to be installed below the oil pump of the engine.

CAUTION: The oil cooler has to be installed with connections upwards i.e. in positive direction on z-axis. This will prevent an unintentional draining of the oil cooler at longer engine stop.

WARNING: The oil cooler has to be planned and installed such that the specified operating temperatures are maintained and the max. values are neither exceeded nor fall below.

This state has to be warranted for "hot day conditions" too!

If need be, take appropriate measures like changing size of cooler, partial covering of cooler etc.

11.7) General notes on oil cooler

Zongshen Aero Engine offers for this engine an oil cooler (see Illustrated Parts Catalog).

WARNING: Certification of the cooler to the latest requirements such as CCAR or GJB has to be conducted by the aircraft manufacturer.

CAUTION: The oil cooler has to be designed to dissipate approx. 9 kW heat energy at take-off power.

NOTE: From years of experience we recommend an oil cooler size of at least 160cm^2 provided that air flow is adequate.

11.8) Filling capacity

the oil tank volume is 3.4L，the volume is 2.7L when the liquid level is located at the Max scale line of oil level gauge，the volume is 2.3L when the liquid level is located at the Max scale line of oil level gauge， the oil volume is 3.0L(excluding the oil in the oil cooler and pipeline).

12) Fuel system

12.1) Description of system

Fuel flows from the fuel tank(1) equipped with the strainer (2) to the mechanical fuel pump(6) through the fire cock(3),the discharge cock(4) and the filter(5).A mechanical fuel pump then feeds the fuel to two carburetors.

Excess fuel flows through the return line(8) back to the fuel tank or the suction side of the fuel system.

NOTE: **the backflow line can prevent the failure caused ba the formation of gas resistance.Backflow lines should be limited to facilitate the circulation of excess fuel and air without loss of pressure.**

The fuel system consists of the flowing parts:

- fuel tank
- strainer
- filter
- Drain cock
- The fire cock
- 1 mechanical fuel pump
- 2 carburetors
- And the required fuel lines and fittings

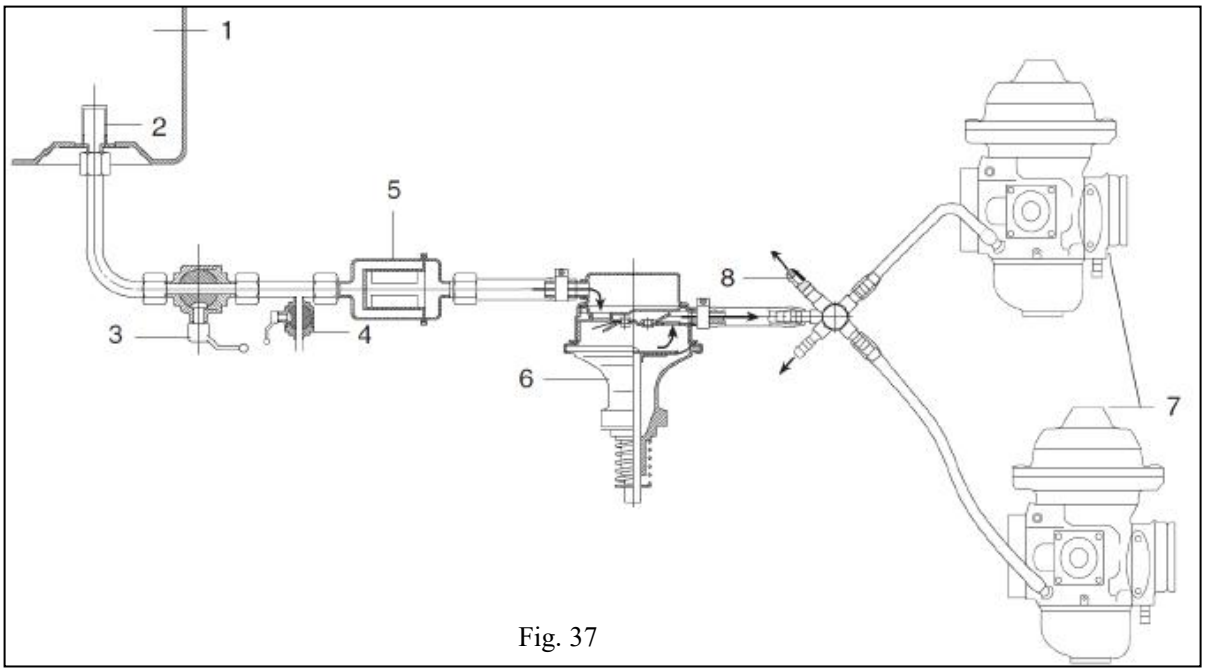

Fig. 37

1	fuel tank entrance	2	strainer
3	The fire cock	4	Drain cock
5	filter	6	mechanical fuel pump
7	carburetors	8	fuel line

12.2) Operating limits

WARNING: Design and layout of the fuel system has to warrant engine operation within the specified limits.

Fuel pressure:

Max 0.4bar

Min 0.15bar

NOTE: **No connection point for fuel pressure measurement is provided for standard engines.(to measure the fuel pressure,connect the fuel pressure gauge and the fuel pressure gauge connection line in the fuel line from the outlet of the mechanical fuel pump to the carburetor.)**

12.3) Requirements of the fuel system

Fuel lines: See Fig. 37.

WARNING: Fuel lines have to be established to the latest requirements such as CCAR or GJB by the aircraft manufacturer.

CAUTION: For prevention of vapour locks, all the fuel lines on the suction side of the fuel pump have to be insulated against heat in the engine compartment and routed at distance from hot engine components, without kinks and protected appropriately.

Fuel filter: See Fig.37

Coarse filter: on fuel tank as per valid certification

Fine filter: in the feed line from tank to the 2 fuel pumps an additional fine filter with meshsize 0.1mm has to be provided. The filter has to be controllable for service. A combination of filter/watertrap (gascolator) is recommended.

Fuel temperature: to avoid vapour locks keep the temperature of the fuel lines, float chamber and related deviced below 36℃.

12.4) Connecting dimensions, location of joints and directives for installation

12.4.1) Mechanical fuel pump

NOTE: when the hose is connected,make sure the connection is safe and reliable by means of a clamp with screws or a bent connector, using the full connection size.

Interface:

mechanical fuel pump inlet joint(2):

Outer diameter	8mm
Connection length	Max.22mm

mechanical fuel pump vent joint(4):

Outer diameter	6mm
Connection length	Max.25mm

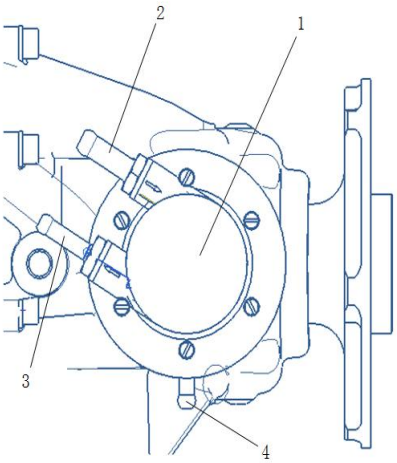

Fig. 38

13) Carburetor

The carburetors on the standard engine are already attached by a flexible flange. Only connections of the Bowden cable for throttle and starting carb have to be established.

It is recommended, to make the adjustment of the Bowden cable after engine installation has been completed, to ensure exact final adjustment.

CAUTION: In case this has not been taken care of, verification of the throttle position is required prior to the trial run. Refer to section 13.4.

13.1) Requirements on the carburetor

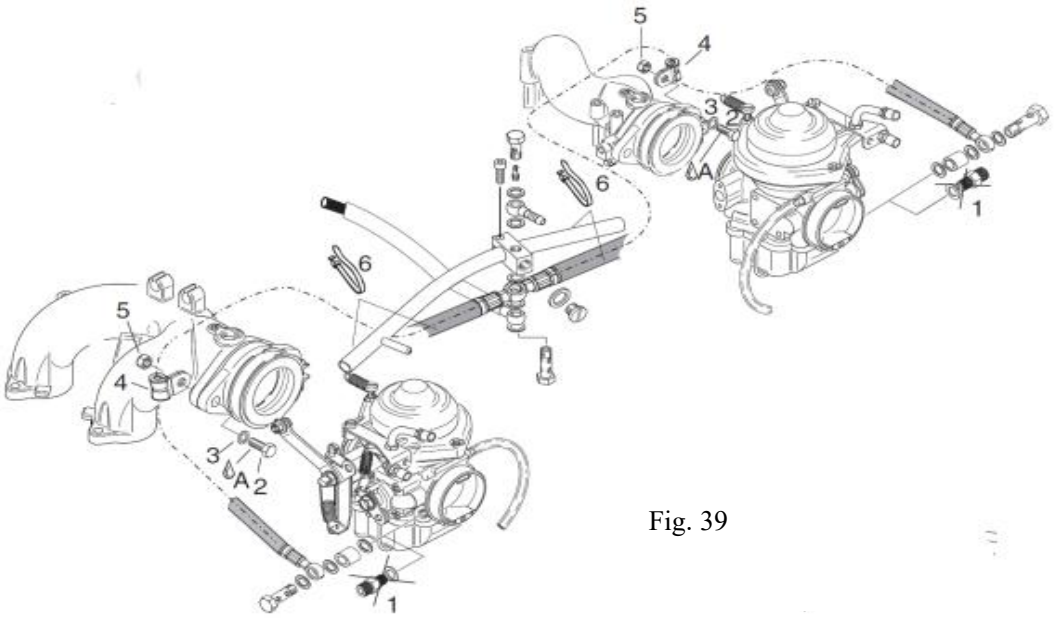

Fig. 39

WARNING: In the area of the float chamber the temperature limit of the fuel must not be exceeded. If necessary install additional insulation or heat shields. Certification to the latest requirements such as CCAR or GJB has to be conducted by the aircraft manufacturer.

13.2) Connections for Bowden-cable actuation and limit load.

-connection for throttle actuation (1)

connection on throttle lever: set screw M 5x12

tightening torque: 4 N.m (suitable for 1,5 mm steel wire)

action travel: 65 mm

actuating force: min. 1,5 N

max. 8 N

limit load: 20 N

NOTE: Throttle opens by spring.

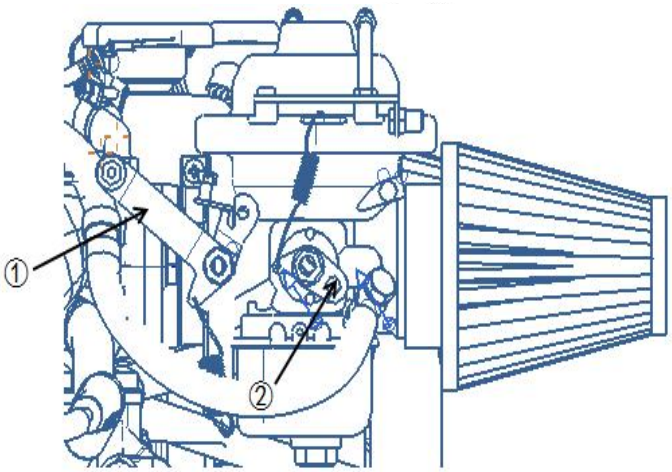

Fig.40

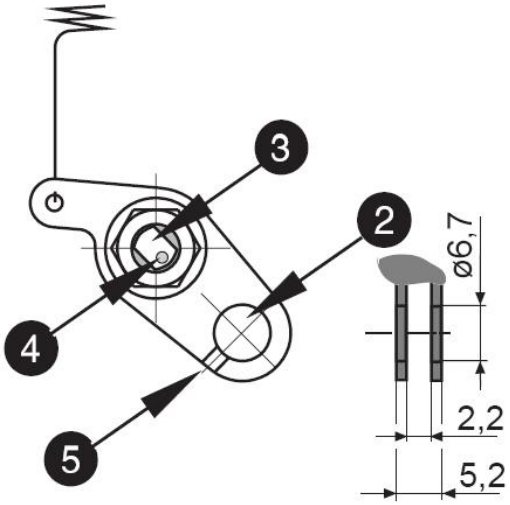

Fig. 41

-connection for starting carb (choke) actuation(2)

connection on choke lever: clamping nipple (suitable for 1.5 mm steel wire)

action travel: 23 mm

actuating force: min.10 N

max. 24 N

limit load: 100 N

Directive for choke actuation

The choke shaft (3) is marked (4).This mark has to point towards cable engagement.

13.3) Requirements on cable actuation

The two throttles have to be controlled by two separate Bowden cables working synchronously.

Adjust the cables to a free travel of 1 mm.

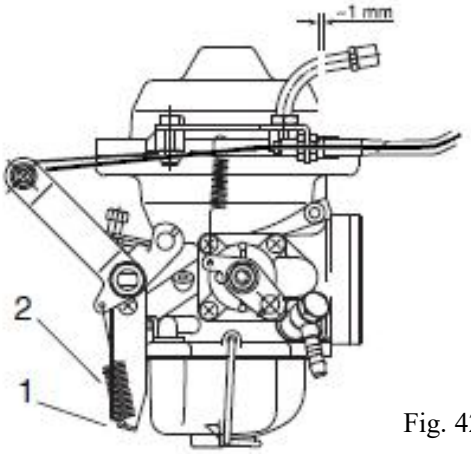

Fig. 42

WARNING: With throttle lever not connected the carb will remain fully open. **The home position of the CD-carburetor is full throttle!** Therefore never start engine without connecting throttle lever first.

WARNING: Route Bowden cable in such a way that carb actuation will not be influenced by any movement of engine or air frame, thus possibly falsifying idle speed setting and carb synchronisation.

Adjust Bowden cable such that throttle and choke can be fully opened and closed.

Use Bowden cable with minimized friction so that the spring on the throttle can open the throttle completely. Otherwise increase pretension of spring by bending lever flap (1) or fit a stronger return spring,(2) or a cable with pull-push action would have to be used.

13.4) Requirements on the throttle lever

The sketch (Fig. 43) depicts a feasible arrangement.

The throttle lever is pressed onto throttle gate and comes to a stop at max. continuous power. Against the spring force the throttle lever will be released from the detent and can be moved further to take-off performance.

CAUTION: Adjustable positive stops for idle- and full throttle position are of course required.These stops have to be designed such to render adjustibility and to prevent overload of the idle stop on the carburetor.

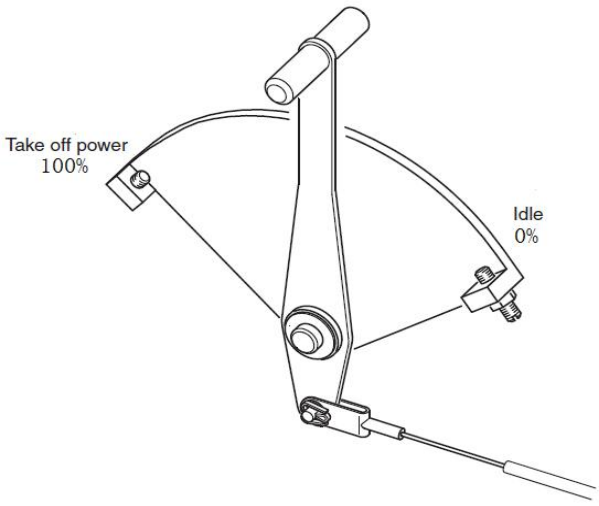

Fig. 43

14) Air intake system

The pressure side intake system from turbo charger to the carburetors is included in the scope of supply.

14.1) Requirements on the air intake system

WARNING: Carb icing is a common reason for engine trouble. No implements are included in the supply volume for preheating of the intake air.

Preheating of the intake air will result in performance loss because of the lower air density.

WARNING: All items of the air intake have to be secured against loss.

WARNING: The certification to the latest requirements such as CCAR and GJB has to be conducted by the aircraft manufacturer.

14.1.1) Requirements on the intercooler:

-a minimum flow rate of 300m^3/h has to be warranted for all conditions

-the pressure loss must not exceed 15 hPa

CAUTION: No additional forces or moments are allowed on turbo charger or airbox, therefore the intercooler has been supported independent and free of vibrations.

14.2) Additional notes concerning air intake system

Zongshen Aero Engine provides dry air filter.

WARNING: The certification to the latest requirements such as CCAR and GJB has to be conducted by the aircraft manufacturer.

The following points can help aircraft manufacturers to select suitable air filter:

-baffeta on four sides

-covered by aluminum mesh

-filter range is at least 1400 cm^2

15) Electric system

The engine is supplied with the wiring completed and ready to operate. Only the following connections to the aircraft have to be established.

-integrated generator

-external rectifier-regulator

-electronic modules

-electric starter

-start relay

-items conditional for operation like circuit breakers, ON-OFF switches, control lamps, relays, instrumentation and capacitors

Optional extras

-external alternator (as option if the output of the integrated generator is inadequate)

-electric tachometer (accessory)

-battery

15.1) Requirements on circuit wiring

CAUTION: The connections have to be completed by the aircraft manufacturer in accordance to effective certification and wiring diagram (Fig. 48).The electromagnetic compatibility (EMC) and electromagnetic interference (EMI) is greatly affected by the wiring and has to be checked for each installation.

WARNING: The supply to the various consumers (e.g. battery) has to be protected adequately by fuses (consult wiring diagram). Using fuses too large may result in damage to electric equipment.

Under no circumstances route consumers cables (e.g. battery) side by side with ignition cable. Induction could cause problems.

CAUTION: An excess-voltage protection has to be realized by the aircraft manufacturer in accordance to effective regulations.

WARNING: The certification to the latest requirements such as CCAR or GJB has to be conducted by the aircraft manufacturer.

15.2) Wiring diagram

(See Fig. 44)

C80 series engine electrical wiring parts details

S/N	Name		S/N	Name
1	2 electronic modules (A and B)		17	starter switch
2-3	plug connection for ignition switch		18	Control light
4	integrated generator		19	battery relay
5-6	external regulator		20	battery
7	electric starter		21	bus bar
8-9	starter relay with plug connection		22	capacitor
10-12	external alternator with connections		23	circuit breaker
13	electric rev-counter		24	Trigger coil assembly
14	capacitor		25	electric fuel pumps
15	2 ignition switches		26	Electronic module starting
16	master switch			

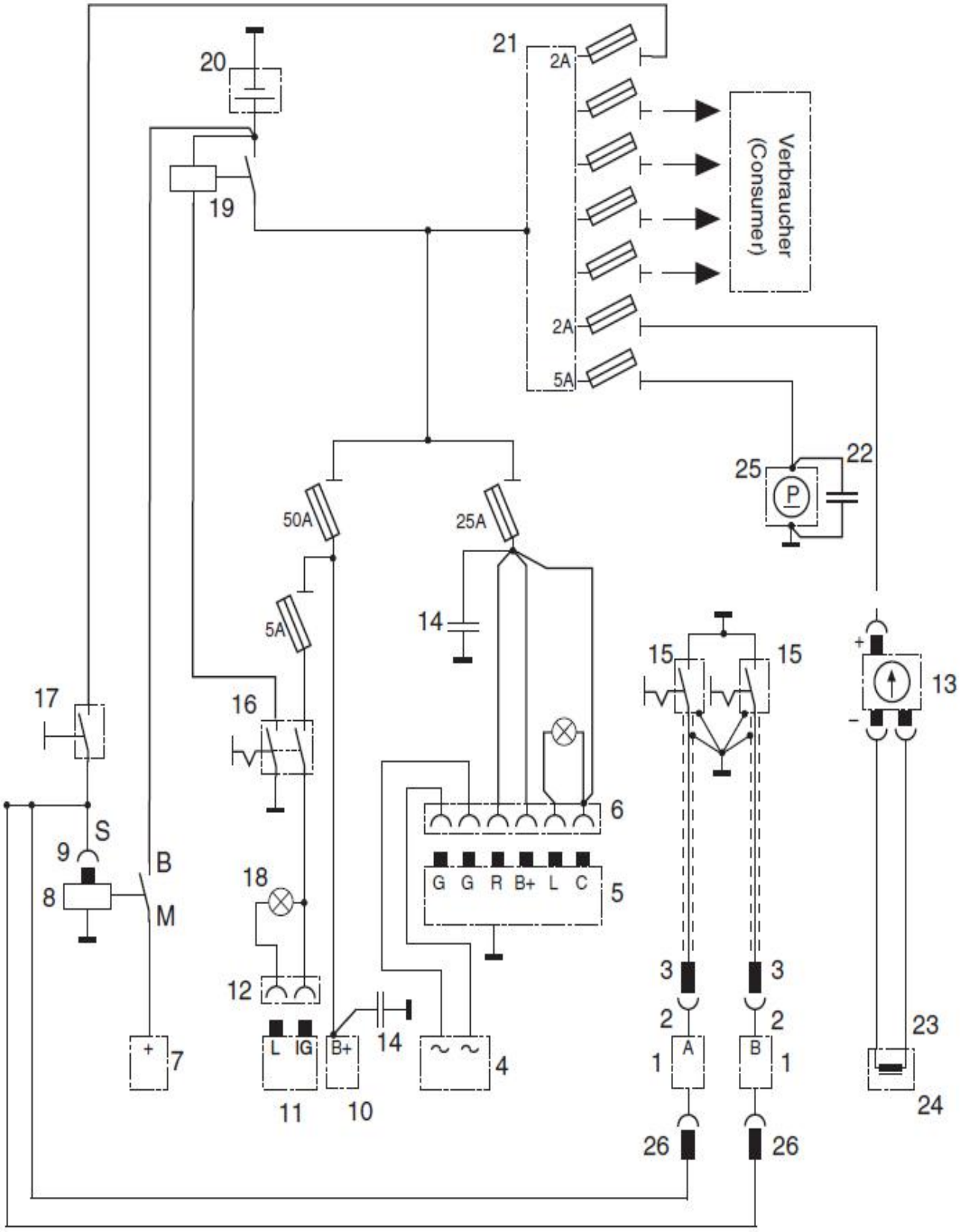
20
21
2A
Verbraucher
(Consumer)
19
2A
5A
25
22
P
50A
25A
5A
14
15
15
13
17
16
6
S
9
B
8
M
18
G G R B+ L C
5
12
3
3
2
2
14
L IG
B+
A
B
1
1
7
11
10
4
23
24
26
26

Fig. 44

15.3) Technical data and connection of the electric components

15.3.1) Integrated generator

Feeding wires (1) from the generator to rectifier-regulator on left side of ignition housing (see Fig. 51).

-2 flexible cables, 1.5 mm^2 yellow (in shielding metal braid)

-length approx. 660 mm starting from ignition housing

-with on each plug socket 6.3×0.8 617104BSS

NOTE: approx. 250W AC output at 4000 (r.p.m.)

For DC output in connection with rectifier-regulator. See section 15.2.3.

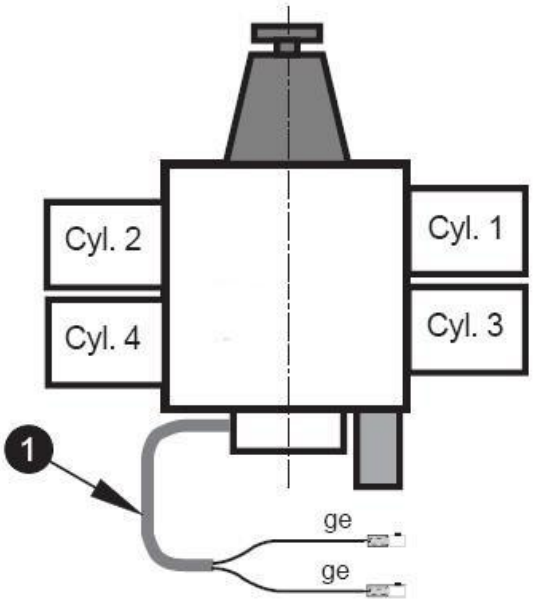

Fig. 45

15.3.2) Rectifier-regulator

-type: electronic full-wave rectifier regulator

-effective voltage: 14±0.3 V (from 1000±250 r.p.m.)

-current limit: max. 22 A

-max. permissible component temperature: -25～+90° C

-weight: 0.3 kg

Description of connections:

G=yellow - from generator

R=red - to battery, positive terminal

+B=battery positive terminal

L=warning lamp circuit

C=control or field circuit

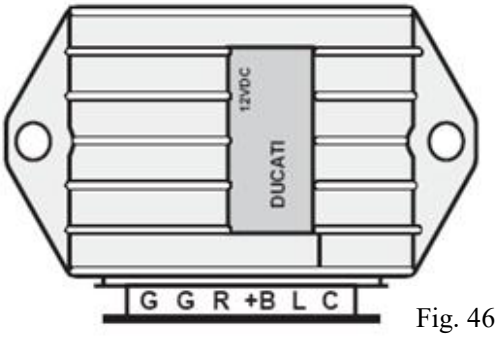

Fig. 46

Requirements for flawless operation of the rectifier-regulator

-the rectifier-regulator has to be protected by a slow blowing 25A fuse.

-wire size of the main circuit of at least 2.5 mm^2

-a capacitor of at least 22000μF/25V is necessary

Cable assy should be as short as possible and cross parts are better.

-At any time do not cut the connection lines between C and B like fuse.

The graph current over engine speed has been determined and is valid only at the following conditions.

ambient temperature:..... 20℃

voltage:.....permanent 13.5 V

tolerance:.....max 5%

NOTE: A charge-indicating lamp 3W/12V may be fitted on the instrument panel.

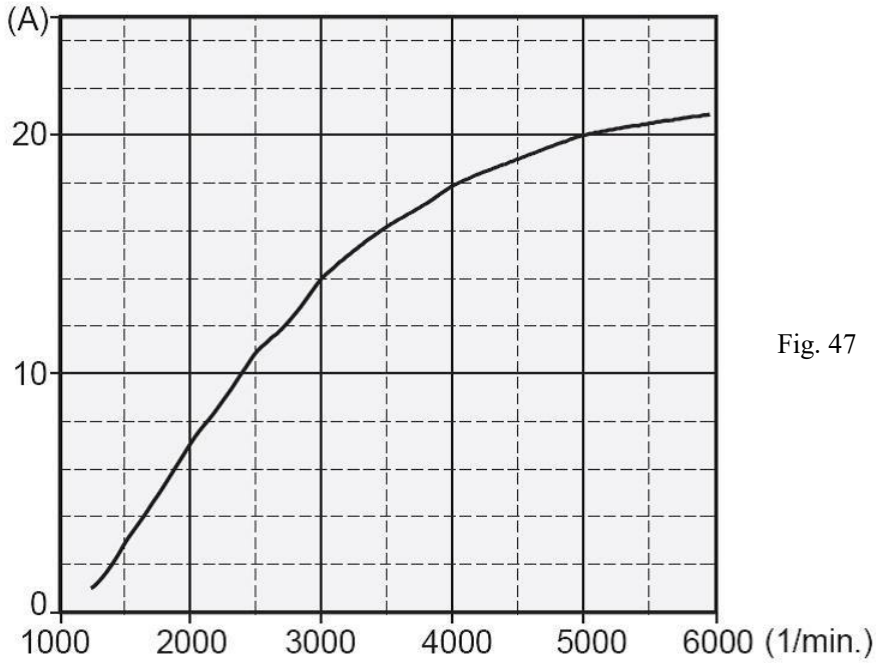

Fig. 47

15.3.3) Electronic modules

See Fig. 48

Ambient temp. for the electronic modules (1): max. 80℃

Fig. 48

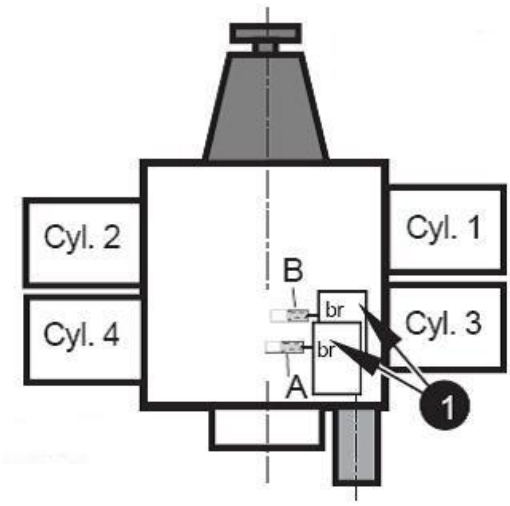

15.3.4) Ignition switches (on-off switch)

See Fig. 48

-type: two separate, suitable on-off switches

-switching voltage: min. 250 V

-switching current: min. 0.5 A

Wires from the ignition switches connect to the electronic module (see Fig. 46)

-one each flexible wire 0.75 mm^2 brown,length approx. 35 mm beginning at electronic module with one each plug socket and insulating sleeve 3.96 mm.

NOTE: One each cable grommet and flat pin terminal are supplied loosely packed.

-Wire of top electronic module (marked "A") for ignition circuit A.

-Wire of bottom electronic module (marked "B") for ignition circuit B.

NOTE: Ignition circuit A controls: top spark plugs of cylinder 1 and 2; lower spark plugs of cylinder 3 and 4. Ignition circuit B controls: top spark plugs of cylinder 3 and 4; lower spark plugs of cylinder 1 and 2.

CAUTION: The electromagnetic compatibility (EMC) and electromagnetic interference (EMI) depends essentially on the wire used.

Min. section area: 2x 0.75 mm^2 (shielded flexible cable, shielding braid (low-resistance) on both ends grounded to prevent EMI.

The metal base of each ignition switch must be grounded to aircraft frame to prevent EMI.

15.3.5) Electric starter

Wire from starter relay to the electric starter

-cross section of at least 16 mm^2

-output: 0.7 kW

-positive terminal (1): M6 screw (tightening torque 8Nm) suitable for ring terminal to equivalent

-grounding: via engine block

CAUTION: Suitable for short starting periods only.

CAUTION: Activate starter for max.10 sec. (without interruption), followed by a cooling period of 2 min!

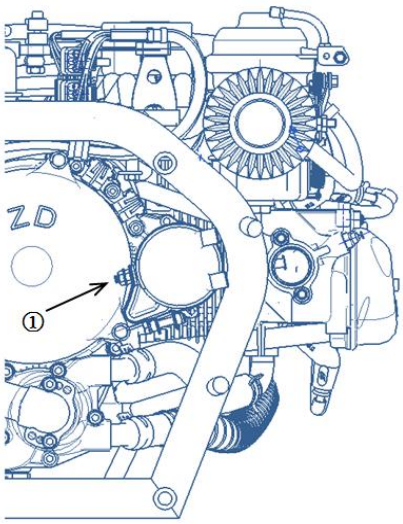

Fig. 49

15.3.6)Starter relay

-nominal voltage: 12 V

-control voltage: min. 6 V max. 18 V

-switching current: max. 75 A (permanent)
max. 300 A (for 1 sec.)

-ambient temperature range: min.- 40℃ max. +100℃

-weight: 0.145kg

-current connections (1):

M6 screw (tightening torque 8 Nm) suitable for ring terminals

-control wiring (2):plug connector 6.3x0.8 suitable for spade connector

-grounding: via housing

CAUTION: Activation of start relay limited to short duration.

15.3.7) Connection of the electric rev-counter (tachometer)

From the electronic tachometer to the left side of the ignition housing

Connection:use 2 flexible cables with a cross-sectional area of 0.75mm2,white/yellow and blue/yellow (in insulated packaging)

Length:about 600mm from ignition

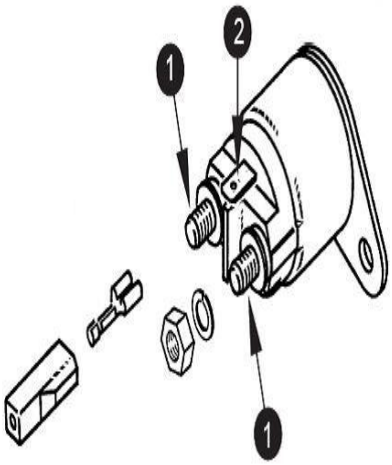

Fig. 50

NOTE: that the figure below shows the output signal,and the test condition is an ambient temperature of 20℃±5%.

The figure is the pulse signal of each cycle of the electronic tachometer.The pulse shape and voltage are recorded in the oscillogram.

500r/min 100Ω

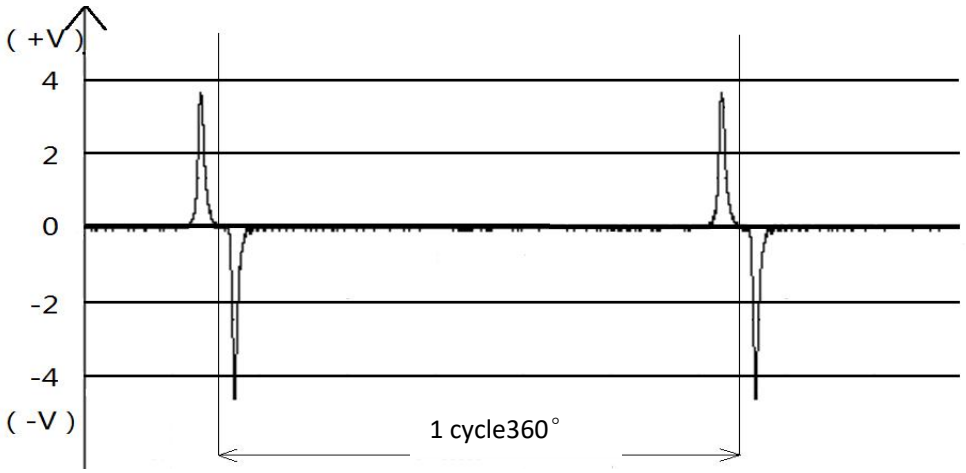

500r/min 100kΩ

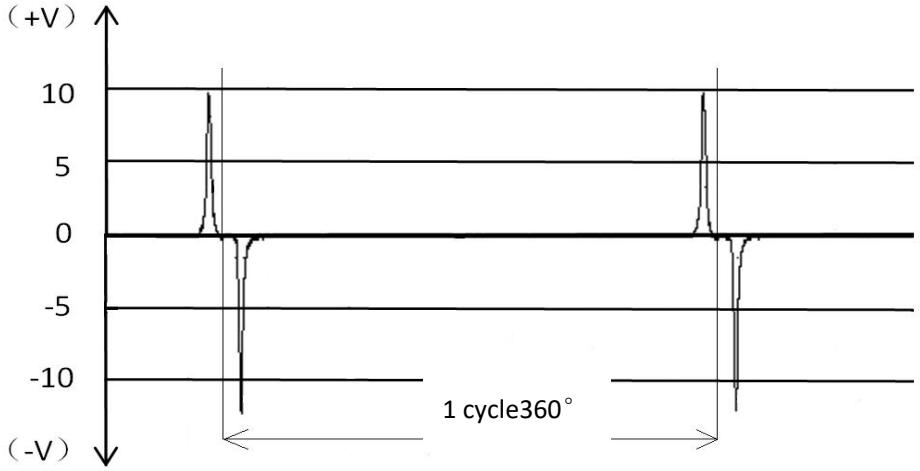

6000r/min 100Ω

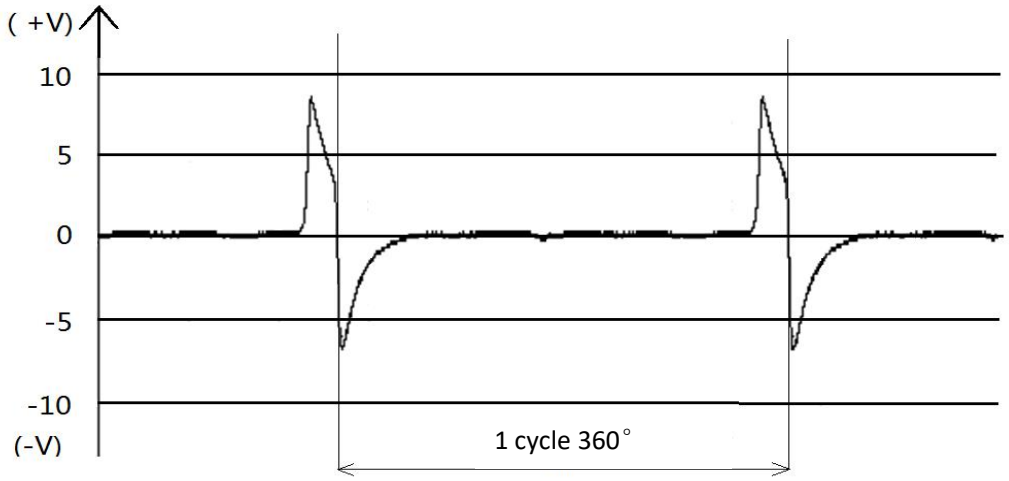

6000r/min 100kΩ

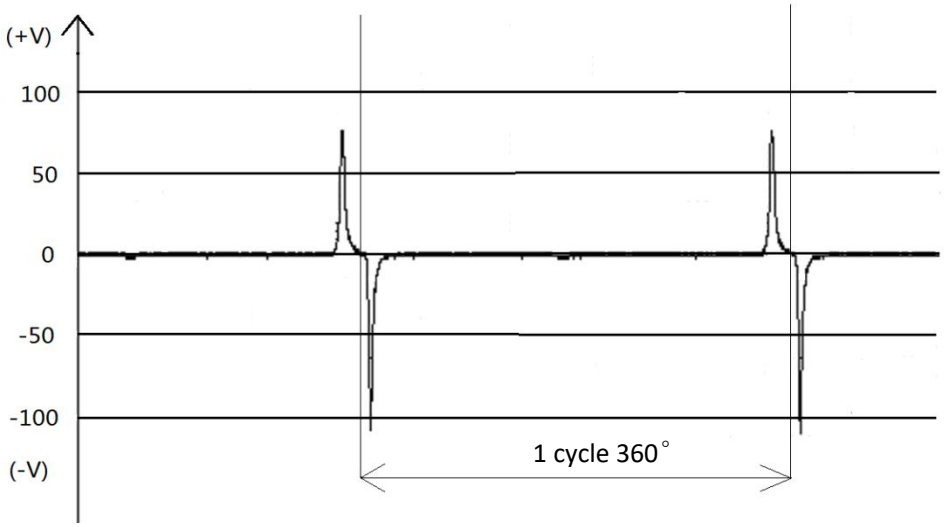

Fig. 51

15.3.8) Battery

CAUTION: To warrant reliable engine start use a battery of at least 16 Ah capacity.

16) Propeller drive

The propeller in tractor or pusher arrangement has to be fitted on the propeller flange in accordance to current certification. As required utilize one of the three possible pitch circle diameters (P.C.D.) on the flange.

Certification of the propeller sizing and arrangement to the latest requirement such as CCAR or GJB has to be conducted by the aircraft manufacturer.

WARNING: Never run the engine without a propeller installed as engine would suffer severe damage by over speeding. Never fit propeller directly on crankshaft.

16.1) Technical data

See Fig. 52.

-direction of rotation of the prop flange: counter clockwise, looking towards face of flange

-location: see system of coordinates

-attachment of propeller on prop shaft flange:

P.C.D 75 mm: 6 bolt holes of 8 mm dia

P.C.D 80 mm: 6 bolt holes of 11.5 mm dia

P.C.D 101.6 mm: 6 bolt holes of 13 mm dia.

-ratio of gear reduction: 2.43（51T/21T）

-max. torque: 255 N.m at propeller

-max. moment of inertia :6000 kg cm^2

-max. permitted static out-of-balance on a prop: max. 0.5 gm

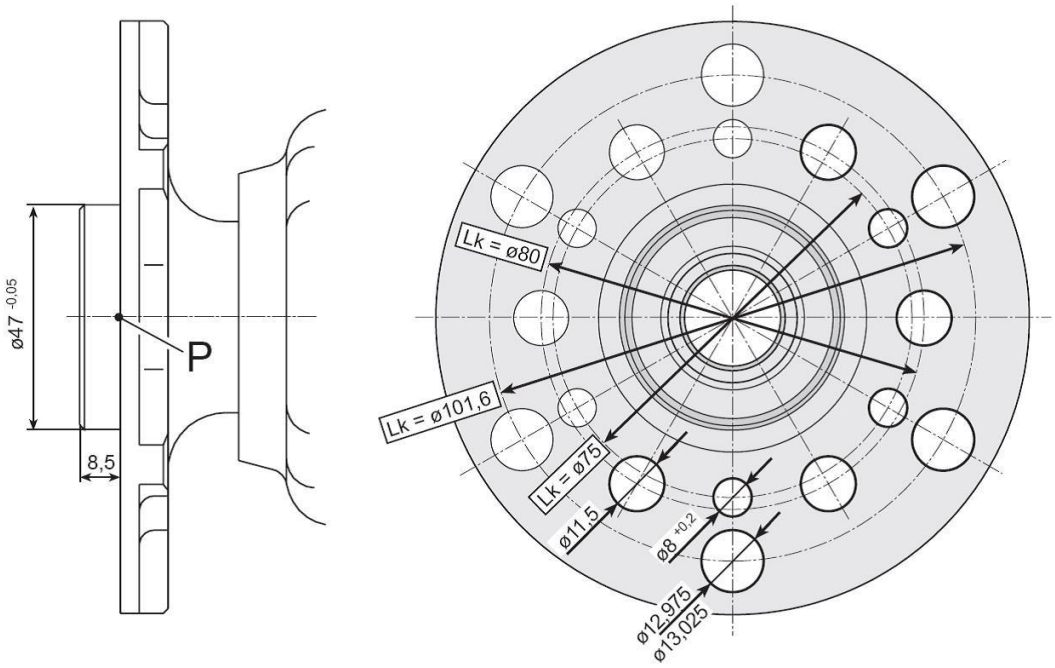

Fig.52

17) Connections for instrumentation

These connections to be established in accordance to certification and/or national specifications. The certification for connections and connection lines have to be conducted by the aircraft manufacturer to the latest requirements like CCAR and GJB.
For notes regarding the electric rev counter consult the chapter 15.3.7

17.1) Sensor for cylinder head temperature

See Fig. 53, and 54.

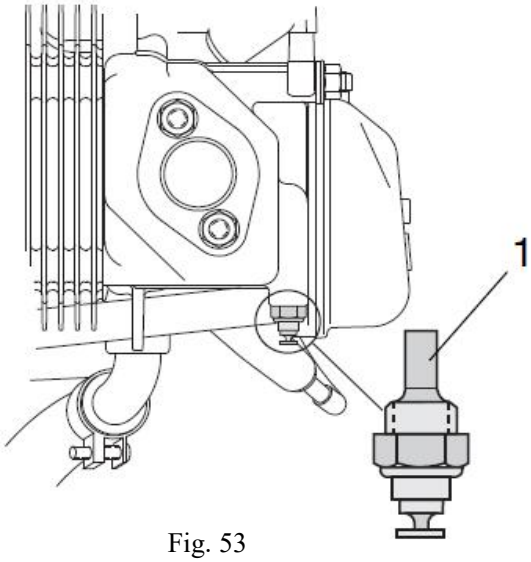

Fig. 53

NOTE: A direct reading of the coolant temperature is not provided for.The temperature sensor (1) is directly fitted into cylinder head i.e. a direct temperature reading of the cylinder head material is taken. This allows the exact measuring of the cylinder head temperature even in the case of coolant loss.

NOTE: Readings are taken on the hottest cylinder, depending on engine installation.

-Readings on cylinder head: location: in the cylinder head of the cylinders 1, 2, 3, 4.
-Readings of cooling liquid: location: in the cylinder head of the cylinders 2 and 3.
-connection: spade terminal 6.3x0.8
-grounding: via engine block
-graph of sensor resistance over temperature

	Axes（mm）		
Cylinder head	X axis mm	Y axis mm	Z axis mm
2	-200	241	-157
3	-387	-241	-157

-grounding: via engine block

-The sensor type is VDO thermistor, Measurement range:-40℃～+150℃；

-Signal range:see temperature-resistance table for details

Temperature(℃)	resistance(Ω)	Temperature(℃)	resistance(Ω)
−40	32422	60	262
−30	17472	70	186
−20	9728	80	134
−10	5587	90	99
−	3308	100	74
10	2027	110	56
20	1280	120	43
30	832	130	33
40	553	140	26
50	377	150	21

Fig. 54

17.2) Sensor for oil temperature

-location: oil pump housing

-marking (2): marked with "TO" (temperature oil) on oil pump flange

CAUTION: To avoid any mix-up with indication wiring, mark this particular cable also with "TO".

-position of the temperature sensor (1) on the oil pump flange:

	Axes（mm）		
Point of support	X axis mm	Y axis mm	Z axis mm
	-115	46	-150

-connection of sensor wiring: spade terminal 6.3 x 0.8.

-grounding: via engine block

-The sensor type is VDO thermistor,Measurement range:-40℃～+150℃；

-Signal range:see temperature-resistance table for details.

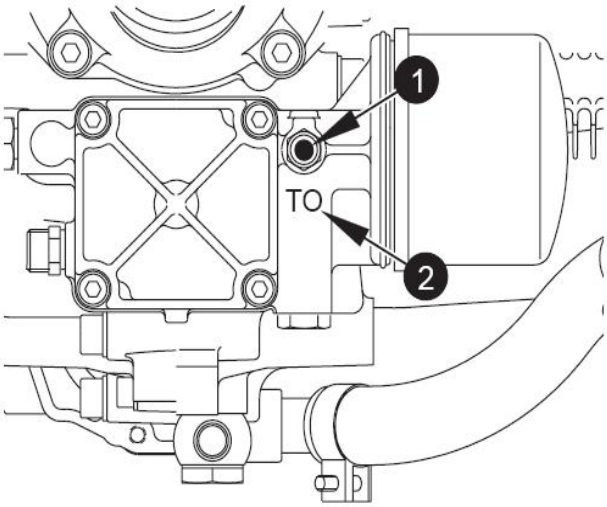

Fig. 55

Temperature(℃)	resistance(Ω)	Temperature(℃)	resistance(Ω)
−40	32422	60	262
−30	17472	70	186
−20	9728	80	134
−10	5587	90	99
−	3308	100	74
10	2027	110	56
20	1280	120	43
30	832	130	33
40	553	140	26
50	377	150	21

Fig. 56

17.3) Oil pressure sensor

See Fig. 57/58

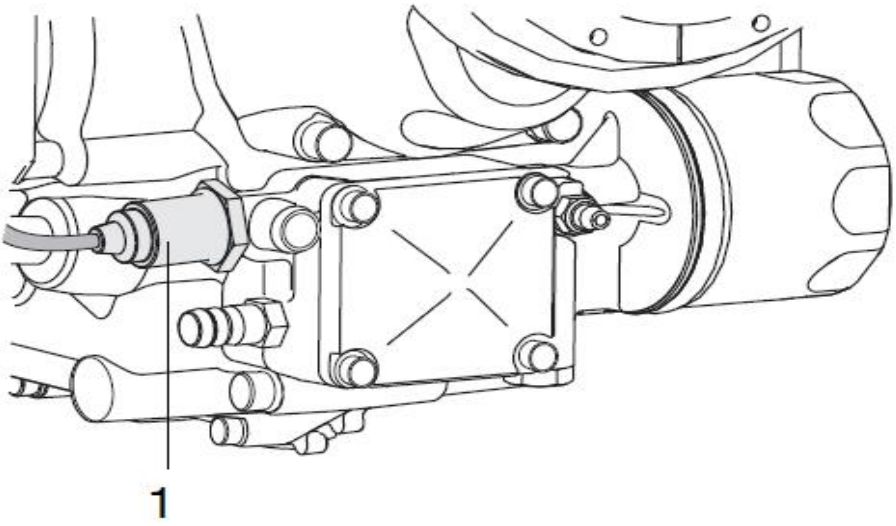

Fig. 57

-location: oil pump housing

-position of connection on oil pressure pick-up (1):

	Axes（mm）		
Point of connection	X axis mm	Y axis mm	Z axis mm
	-100	75	-150

-connection of pick-up wiring: single pole screw connection for ring terminal 3

-grounding: via engine block

-graph of resistance over pressure

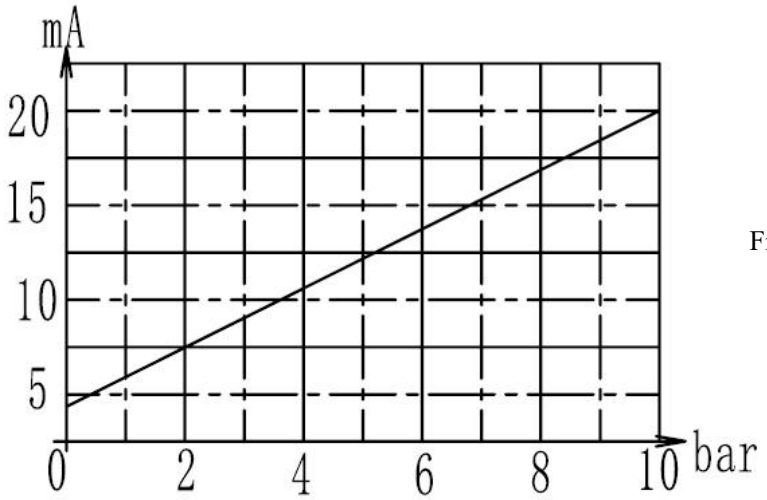

Fig. 58

CAUTION: The graph resistance over pressure has been determined, and is effective at the following conditions only.

ambient temperature: 20℃ (68℉)

voltage: 12 V

tolerance: ±5%

WARNING: Certification to the latest requirements such as CCAR of GJB has to be conducted by the aircraft manufacturer.

17.4) Monitoring of the intake manifold pressure

Connection nipple (1) to measure manifold pressure:

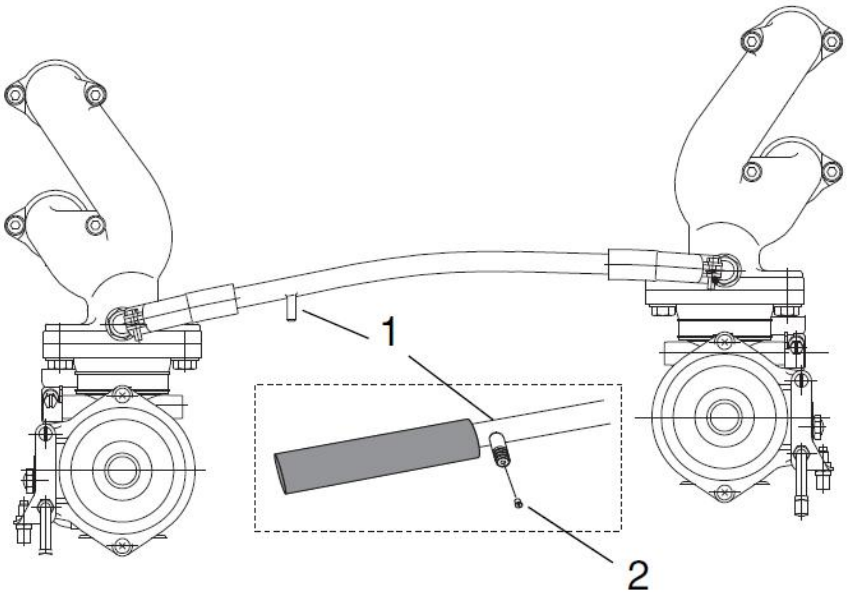

Fig. 59

outside dia. ø.....6 mm

slip-on length.....max. 17 mm

CAUTION: Utilize the total slip-on length on all joints. Secure hose by suitable screw clamps or crimp connection.

WARNING: If the reading place is not used, the pin for the cover used in the process of installment and delivery should be plugged.

CAUTION: Flawless operation of the indicating instrument needs the installations of a water trap between engine and instrument for the fuel condensate.

18) Preparations for trial run of engine

WARNING: Prior to engine start and operation review all instructions stated in the Operators Manual.

Verification of the throttle lever detent for max. continuous power:

Performance check in accordance with Operator's Manual.

If nominal performance won't be reached or is in excess of, examination of the installation and engine will be necessary. Consult Maintenance Manual.

CAUTION: Don't conduct any test flights before all faults have been traced and found.